AGENDA
BENBROOK CITY COUNCIL
THURSDAY, AUGUST 4, 2016
911 WINSCOTT ROAD, BENBROOK, TEXAS

PRE-COUNCIL WORKSESSION 7:00 P.M.
CENTRAL CONFERENCE ROOM
1. Review and discuss agenda items for regular meeting

REGULAR MEETING 7:30 P.M.
COUNCIL CHAMBERS
ALL AGENDA ITEMS ARE SUBJECT TO FINAL ACTION

I. CALL TO ORDER

II. INVOCATION/PLEDGE OF ALLEGIANCE

Invocation To Be Given By Reverend Mike Redd

III. MINUTES

1. Approve Minutes Of The Regular Meeting Held July 21, 2016

Documents:

CC MINUTES-07-21-16.PDF

IV. CITIZEN PRESENTATION

1. 4PAWS - Caroline Lausch - Speaking On Proposed Budget

Documents:

CITIZEN PRESENTATION - 4PAWS.PDF

V. PRESENTATION BY MAYOR AND MEMBERS OF COUNCIL

CC-2016-05 Reschedule October 6, 2016 Regular City Council Meeting

Documents:

CC-2016-05 MEMO OCTOBER 6, 2016 MEETING.PDF

VI. REPORTS FROM CITY MANAGER

A. GENERAL

G-2254 Accept 2016 Certified Appraisal Roll, Set Anticipated Collection Rate, And Appoint An Officer To Calculate The Effective Tax Rate And Roll Back Tax Rate

Documents:

G-2254 ACCEPT CERTIFIED APPRAISAL ROLL 2016.PDF
G-2254 INFORMATION ON CERTIFIED APPRAISAL ROLL.PDF

G-2255 Accept Hotel/Motel Tax Report For Period Ending June 30, 2016

Documents:

G-2255 HOTEL MOTEL TAX REPORT.PDF
G-2255 HOTEL MOTEL SPREADSHEET.PDF

G-2256 Adopt Ordinance Amending Chapter 15 Of The Benbrook Municipal Code By Adopting The 2015 Editions Of The International Building Code, International Residential Code, International Fire Code, International Plumbing Code, International Mechanical Code, International Fuel Gas Code, And International Energy Conservation Code.

Documents:

G-2256 ADOPT 2015 BUILDING CODES.PDF
G-2256 ORDINANCE 2015 BUILDING CODE.PDF

G-2257 Adopt Ordinance Amending Speed Limit On RM 2871 Between The City Limit Line And Benbrook Boulevard (U.S. Highway 377) And Portions Of Jerry Dunn Parkway And Whitestone Ranch Road

Documents:

G-2257 SPEED LIMITS RM2871, JERRY DUNN, WHITESTONE RANCH.PDF
G-2257 ORDINANCE SPEED LIMITS.PDF

VII. INFORMAL CITIZEN COMMENTS

State Law Prohibits Any Deliberation Of Or Decisions Regarding Items Presented In Informal Citizen Comments. City Council May Only Make A Statement Of Specific Factual Information Given In Response To The Inquiry; Recite An Existing Policy; Or Request Staff Place The Item On An Agenda For A Subsequent Meeting. The Exception To Informal Comments Is That Once An Election Date Has Been Set By City Council Comments Relative To Elections Will Not Be Broadcast On The City's Cable Channel. However, A Copy Of The Tape Containing Citizens' Comments Will Be Available At City Hall For Review Or Purchase By Interested Citizens.

VIII. COUNCIL MEMBER AND STAFF COMMENTS

Announcements From City Councilmembers And City Staff May Be Made For Items To Include: Expression Of Thanks; Congratulations; Condolence; Recognition Of Public Officials, Employees Or Citizens; Information Regarding Holiday Schedules; Reminders Of Community Events Or Announcements Involving An Imminent Threat To The Public Health And Safety Of The Municipality That Has Arisen After The Posing Of The Agenda. No Discussion Or Formal Action May Be Taken On These Items At This Meeting

IX. ADJOURNMENT

MINUTES
OF THE
MEETING OF THE
BENBROOK CITY COUNCIL
THURSDAY, JULY 21, 2016

The regular meeting of the Benbrook City Council was held on Thursday July 21, 2016 at 7:30 p. m. in the Council Chambers at 911 Winscott Road with the following Council members present:

Jerry Dittrich
Larry Marshall
Rickie Allison
Mark Washburn
Ron Sauma

Also Present: Andy Wayman, City Manager
Joanna King, City Secretary
Sherri Newhouse, Finance Director

Others Present: Bill Smith
Denise Huneycutt, Benbrook News
Leon Polk

I. CALL TO ORDER

Meeting called to order at 7:30 p. m. by Mayor Dittrich.

II. INVOCATION/PLEDGE OF ALLEGIANCE

Invocation given by Cheryl Roberts with Tabernacle of Praise
The Pledge of Allegiance was recited.

III. MINUTES

1. Approve Minutes of the Regular Meeting held July 7, 2016

Motion by Mr. Washburn, seconded by Dr. Marshall to approve the minutes of the regular meeting held July 7, 2016.

Vote on the Motion:

Ayes: Dr. Marshall, Mr. Allison, Mayor Dittrich, Mr. Washburn, Mr. Sauma

Noes: None

Motion carries unanimously.

IV. CITIZEN PRESENTATION

1. Commissioner Roy Brooks – Healthy Lives Matter Alzheimer's Education

Leon Polk, Executive Secretary for Commissioner Roy Brooks invited citizens to Inaugural Healthy Lives Matter Alzheimer's Education Series event for the citizens of Tarrant County.

The mission of the Healthy Lives Matter Alzheimer's Initiative is to provide accessibility to education, which will lead to optimal care and services to individuals confronting dementia, their caregivers and family, in an on-going effort to improve quality of life.

The half-day seminar will offer peer support and resources for family, caregivers and healthcare professionals.

The event will be held Saturday, August 20, 2016 from 8:00 a.m. to 1:00 p.m. at the Tarrant County College, Trinity River Campus, 300 Trinity Campus Circle, Action Suite A, Fort Worth, TX 76102. The event is free to the public but registration is required.

Mayor Dittrich expressed appreciation to Mr. Polk for providing this information to our citizens.

V. PRESENTATION BY MAYOR AND MEMBERS OF CITY COUNCIL

CC-2016-04 Adopt Resolution calling General Election for November 8, 2016 and authorize Joint Election Agreement with Tarrant County Elections Division

Joanna King gave the following report: The general election for Members of City Council in Places 2, 4 and 6 is scheduled for Tuesday, November 8, 2016.

The filing period for candidates begins at 8:00 a.m. Monday July 25, 2016 and ending at 5:00 p.m. on Monday, August 22, 2016.

The City Secretary is requesting that the City enter into a Joint Election Agreement with Tarrant County for election services.

Among the advantages of joining Tarrant County for the November 8th election include:

> Tarrant County provides additional early voting polling places within the County. By joining the County, Benbrook residents can vote early at any of these locations and not be restricted to voting only at the Benbrook location.

Tarrant County provides all necessary voting equipment, obtains all polling places, obtains and trains all election officials and obtains any necessary Justice Department submissions. In providing the equipment, the necessity of leasing the equipment from another vendor or making an outright purchase is eliminated, resulting in significant savings.

Motion by Dr. Marshall, seconded by Mr. Sauma to adopt Resolution 2016-10 ordering the General Election for November 8, 2016 and authorize the City Manager or his designee to execute a joint election agreement with Tarrant County.

Vote on the Motion:

Ayes: Mr. Allison, Mayor Dittrich, Mr. Washburn, Mr. Sauma, Dr. Marshall

Noes: None

Motion carries unanimously.

Resolution No. 2016-10 being "**A RESOLUTION AND ELECTION ORDER BY THE CITY COUNCIL OF THE CITY OF BENBROOK, TEXAS CALLING FOR A GENERAL ELECTION TO BE HELD ON NOVEMBER 8, 2016; AUTHORIZING A JOINT ELECTION AGREEMENT BETWEEN TARRANT COUNTY AND THE CITY OF BENBROOK, TEXAS; PROVIDING PROCEDURES FOR THE CONDUCT OF THE ELECTION; AND PROVIDING AN EFFECTIVE DATE."**

VI. REPORTS FROM CITY MANAGER

A. GENERAL

G-2251 Accept finance report for period ending June 30, 2016

Sherri Newhouse gave the following report: General Fund revenues for the month of June were $646,361. Property tax collections were $182,074. Sales tax collected in May but received by the City and recognized as revenue in June was $158,987 for the month. General Fund revenues collected through the end of June were $14,977,422 or 89.88 percent of the budget.

Debt Service revenues collected for the month of June totaled $7,197; all revenue was from property taxes. There were no Debt Service expenditures for June. Total revenues for 2015-16 in the amount of $403,685 exceeded total expenditures of $1,384,463 by $980,778.

General Fund expenditures for the month of June were $1,244,340. Expenditures through the end of June were $11,810,888 or 67.52 percent of the adopted budget.

For the 2015-16 fiscal year-to-date, total General Fund revenues of $14,977,422 exceeded General Fund expenditures of $11,810,888 by $3,166,534.

EDC revenues as of June 30, 2016 were $646,371. Sales tax revenue received by the EDC for the fiscal year was $620,499. EDC expenditures for June were $51,379. Revenues for the year in the amount of $646,371 exceeded total expenditures of $440,364 by $206,007.

Total revenues received through June 30, 2016 for the Capital Projects Fund were $1,931,186. Total expenditures for the Capital Projects Fund in June 2016 were $48,780. Engineering services for drainage projects totaled $36,179. Expenses for the Vista Way Project were $12,600. For the 2015-16 fiscal year, total revenues of $1,931,186 exceeded total expenditures of $777,282 by $1,153,904.

On June 30, 2016, the City had $24,976,357 invested at varying interest rates; the EDC had $6,119,911 available.

Motion by Mr. Washburn, seconded by Dr. Marshall to accept the finance report for the period ending June 30, 2016.

Vote on the Motion:

Motion carries unanimously.

Ayes: Mayor Dittrich, Mr. Washburn, Mr. Sauma, Dr. Marshall, Mr. Allison

Noes: None

Motion carries unanimously.

G-2252 Authorize Interlocal Agreement with Benbrook Water Authority for Street Cut Repair Services

Andy Wayman gave the following report: The Benbrook Water Authority (BWA) is responsible for street repairs when there is a water or sewer failure. Since October 2000, the City has repaired street cuts for the BWA through an annual Interlocal Agreement. Repair cost is $8.91 per square foot.

The BWA Board of Directors approve the Interlocal Agreement at their July 5, 2016 Board meeting.

Motion by Mr. Allison, seconded by Mr. Sauma to authorize the Interlocal Agreement with the Benbrook Water Authority for street cut repair services.

Vote on the Motion:

Ayes: Mr. Washburn, Mr. Sauma, Dr. Marshall, Mr. Allison, Dr. Dittrich

Noes: None

Motion carries unanimously.

G-2253 Adopt Interlocal Agreement with Benbrook Water Authority for Residential Refuse and Storm Water Utility Fee Billing and Payment Collection Services

Andy Wayman gave the following report: The City does not have a monthly billing system. Through an Interlocal Agreement, the City uses Benbrook Water Authority (BWA) to bill and collect for refuse and storm water utility accounts.

The reimbursement to BWA is 49.58 cents per bill. The agreement includes the ability to process credit card payments.

The BWA Board of Directors approved the Interlocal Agreement at their July 5, 2016 Board meeting.

Motion by Mr. Washburn, seconded by Mr. Allison to authorize the Interlocal Agreement with the Benbrook Water Authority for residential refuse and storm water utility fee billing and payment collection services.

Vote on the Motion:

Ayes: Mr. Sauma, Dr. Marshall, Mr. Allison, Mayor Dittrich, Mr. Sauma.

Noes: None

Motion carries unanimously.

VII. INFORMAL CITIZEN COMMENTS

VIII. COUNCIL MEMBER AND STAFF COMMENTS

Councilmember Ron Sauma expressed condolence to the families of the Dallas Police Officers that recently lost their lives. He expressed appreciation to the Benbrook Police Officers and all law enforcement agencies that serve to protect citizens.

IX. ADJOURNMENT

Meeting adjourned at 7:48 p.m.

APPROVED:

_____

Jerry B. Dittrich, Mayor

ATTEST:

_____

Joanna King, City Secretary

Joanna King

From: Joanna King
Sent: Wednesday, July 27, 2016 12:33 PM
To: Joanna King
Subject: City Council Agenda 8-4-16

From: dunkin [mailto:wedunkin@juno.com]

Hi Joanna,

We will be discussing the proposed budget at this meeting. The other item is still pending, and I will most likely try to get it on the 8/21 agenda. We're dealing with kids on vacation, and they should be back getting ready for school by then.
Thanks,
Pat

From: Joanna King <JKing@benbrook-tx.gov>
To: dunkin <wedunkin@juno.com>
Pat

Can you send another email with a description of what the topic will be please? Is this the item we discussed awhile back?

Joanna King

From: dunkin [mailto:wedunkin@juno.com]
Sent: Tuesday, July 26, 2016 4:44 PM
To: Joanna King
Subject: City Council Agenda 8-4-16

Hello Joanna,

I am requesting, on behalf of 4 PAWS, a place on the 8-4-16 City Council Agenda. Caroline Lausch will be the presenter with possible other speakers.

Please let me know if you have any questions or if this will be permitted.

Thanks,

Pat Dunkin

MEMO TO: Mayor and Members of City Council

FROM: Joanna King, City Secretary

SUBJECT: Consider Rescheduling October 6, 2016 Regular City Council Meeting

DATE: August 4, 2016

The Homerule Charter requires City Council to meet in regularly scheduled meetings at least twice each month and such meetings shall be at least one week apart.

The first meeting in October falls on October 6, 2016. The annual Texas Municipal League Conference is scheduled for the week of October 4-7, 2016. Members of City Council have expressed their desire to attend this conference. Because the dates of the conference include the regular meeting date, Staff is requesting Council to reschedule the October 6, 2016 to Monday October 3, 2016.

City of Benbrook

CITY COUNCIL COMMUNICATION

DATE:	REFERENCE NUMBER:	SUBJECT:	PAGE:
08/04/16	G-2254	Accept 2016 Certified Appraisal Roll, Set Anticipated Collection Rate, and appoint an officer to calculate the Effective Tax Rate and Roll Back Tax Rate	1 of 1

Staff received the 2016 Certified Appraisal Roll from the Tarrant Appraisal District (TAD) on Monday, July 25, 2016. The report "Information on the 2016 Appraisal Roll" contains the State-mandated information on appraised value, adjustments, exemptions, and the taxable value of property.

Truth-in-Taxation

To comply with "Truth-in-Taxation" (TNT) requirements of Texas Law, the City Council must accept the Certified Appraisal Roll as presented by TAD, set the anticipated collection rate for 2016-17, and appoint an officer to calculate and publish the Effective Tax Rate (ETR) and the Roll Back Tax Rate (RTR).

Preliminary calculations indicate that the City Council will not be required to take a roll call vote to increase property tax revenues if we maintain the current tax rate or to set an anticipated tax rate.

The "Information on the 2016 Certified Appraisal Roll" indicates that the City of Benbrook will realize a net increase in current property tax revenue of approximately 2.73 percent or about $303,266.

Recommendation

It is recommended that the City Council:

1. Accept the 2016 Certified Appraisal Roll as presented;
2. Set 100 percent as the anticipated property tax collection rate for 2016-17; and,
3. Appoint the Finance Director to calculate and publish the Effective Tax Rate (ETR) and Rollback Tax Rate (RTR);

SUBMITTED BY:	DISPOSITION BY COUNCIL: ☐ APPROVED ☐ OTHER (DESCRIBE)	PROCESSED BY: CITY SECRETARY
CITY MANAGER		DATE:

CITY OF BENBROOK
INFORMATION ON THE 2016 CERTIFIED APPRAISAL ROLL
AS PROVIDED BY THE TARRANT APPRAISAL DISTRICT
ON JULY 25, 2016

DESCRIPTION	JULY 2015 VALUES	JULY 2016 VALUES	DOLLAR CHANGE	PERCENT CHANGE
Certified Appraised Value	**1,859,779,611**	**1,998,945,298**	139,165,687	**7.48%**
Less Exemptions & Adjustments				
Absolute Exemptions - Public	36,280,286	101,885,832	65,605,546	180.83%
Absolute Exemptions - Charitable	570,745	631,335	60,590	10.62%
Absolute Exemptions - Religious & Private Schools	16,494,873	14,318,491	(2,176,382)	-13.19%
Agricultural Deferrals	12,358,124	11,791,652	(566,472)	-4.58%
Scenic Deferrals	40,771	40,771	-	0.00%
ARB Cases	13,017,907	82,755,174	69,737,267	535.70%
Incomplete Accounts	72,693,702	41,287,456	(31,406,246)	-43.20%
Over 65	67,995,291	71,637,209	3,641,918	5.36%
Homestead	29,957,694	30,432,454	474,760	1.58%
Disability	453,750	451,000	(2,750)	-0.61%
Nominal Value Accounts	139,758	319,325	179,567	128.48%
Solar & Wind Powered Devices	0	1	1	0.00%
Pollution Control	0	63,519	63,519	0.00%
Veterans	13,708,196	15,457,415	1,749,219	12.76%
Total Exemptions & Adjustments	**263,711,097**	**371,071,634**	**107,360,537**	**40.71%**
Subtotal	1,596,068,514	1,627,873,664	31,805,150	1.99%
Add Estimated Minimum Values				
Estimated Minimum Values	9,074,035	57,569,545	48,495,510	534.44%
Incomplete Accounts	72,691,486	39,081,470	-33,610,016	-46.24%
TOTAL TAXABLE VALUE	**1,677,834,035**	**1,724,524,679**	**46,690,644**	**2.78%**
ADJUSTMENTS	**12,398,895**	**11,832,423**		
TOTAL TAXABLE VALUE	**1,690,232,930**	**1,736,357,102**	**46,124,172**	**2.73%**
Current Property Tax Revenue	**11,113,282**	**11,416,548**	**303,266**	**2.73%**
One Cent Equals	**169,023**	**173,636**	**4,612**	**2.73%**
DSF	**422,558**	**434,089**	**11,531**	**2.73%**
GF	**10,690,723**	**10,982,459**	**291,735**	**2.73%**
Total	**11,113,282**	**11,416,548**	**303,266**	**2.73%**

City of Benbrook

CITY COUNCIL COMMUNICATION

DATE:	REFERENCE NUMBER:	SUBJECT:	PAGE:
08/04/16	G-2255	Accept Hotel/Motel Tax Report for period ending June 30, 2016	1 of 1

REVENUES

Revenues for the City's hotel/motel occupancy tax fund totaled $25,508 for the quarter beginning April 1, 2016 and ending June 30, 2016. Revenue from the hotel/motel occupancy tax totaled $25,265. The remainder of the revenue was realized from interest income and the sale of apparel.

EXPENDITURES

Expenses for this quarter totaled $51,039. The City Visitor Center expenditures were $28,132. Payments to Benbrook's hotel and motels for promotion of Benbrook were $21,600. The Benbrook Area Chamber of Commerce was reimbursed $1,000 for promotional services. Other expenses were $307.

NET CHANGE IN FINANCIAL POSITION

For the third quarter of the 2015-16 fiscal year, the fund balance for the hotel/motel occupancy tax fund decreased by $25,531 from $304,019 to $278,488.

For the 2015-16 fiscal year, total revenues of $85,895 were exceeded by year-to-date expenditures of $117,309 by $31,414.

RECOMMENDATION

Staff recommends that City Council accept the Hotel Motel Tax Report for the period ending June 30, 2016.

SUBMITTED BY:	DISPOSITION BY COUNCIL: ☐ APPROVED ☐ OTHER (DESCRIBE)	PROCESSED BY: CITY SECRETARY
CITY MANAGER		DATE:

City of Benbrook, Texas
Hotel/Motel Tax (HMOT) Financial Report
For Fiscal Year: October 1, 2015 to September 30, 2016
June 30, 2016

	Beginning	change	Ending
Net Position for the 3rd Qtr Ending June 30	$ 304,019	$ (25,531)	$ 278,488

REVENUE & EXPENSES

Revenue:	Estimated Revenues	Prior Quarters	Current Quarter	Y-T-D	Unearned Balance
Motel 6	$ 29,381	$ 18,281	$ -	$ 18,281	$ 11,100
Benbrook Inn & Suites	10,514	5,844	2,613	8,457	2,057
Comfort Suites	48,245	25,170	13,072	38,242	10,003
Days Inn	40,590	10,038	9,580	19,618	20,972
Donations	5,000	1,000	-	1,000	4,000
Vendor Fees	320	-	-	-	320
DVDs and Apparel	542	39	240	279	263
Interest Income	214	16	3	19	195
TOTAL REVENUES	$ 134,806	$ 60,388	$ 25,508	$ 85,895	$ 48,911

Expenditures:	Adopted Budget	Prior Quarters	Current Quarter	Y-T-D	Budget Balance
Motel 6	11,000	-	11,000	11,000	-
Comfort Inn & Suites	-	-	-	-	-
Days Inn	10,600	-	10,600	10,600	
Visitor Center	110,402	54,948	28,132	83,080	27,322
VC Display	-	-	-	-	-
Thunderbirds	-	-	-	-	-
Benbrook Video	-	-	-	-	-
Benbrook Chamber	4,000	1,000	1,000	2,000	2,000
Chamber Cook-out	2,500	2,500	-	2,500	-
Winter Wonderland	7,000	7,746	307	8,053	(1,053)
Heritage Fest	20,000	76	-	76	19,924
TOTAL EXPENDITURES	$ 165,502	$ 66,270	$ 51,039	$ 117,309	$ 48,193
NET CHANGE IN POSITION	$ (30,696)	$ (5,882)	$ (25,531)	$ (31,413)	

City of Benbrook

CITY COUNCIL COMMUNICATION

DATE:	REFERENCE NUMBER:	SUBJECT:	PAGE:
08/04/16	G- 2256	Adopt Ordinance amending Chapter 15 of the Benbrook Municipal Code by adopting the 2015 Editions of the International Building Code, International Residential Code, International Fire Code, International Plumbing Code, International Mechanical Code, International Fuel Gas Code, and International Energy Conservation Code.	1 of 4

The City of Benbrook currently operates under the 2012 International Code Council series, a series that includes the following:

2012 International Building Code
2012 International Residential Code
2012 International Fire Code
2012 International Plumbing Code
2012 International Mechanical Code
2012 International Fuel Gas Code
2012 International Energy Conservation Code and the
2014 National Electrical Code

The codes are revised every three years to incorporate newly-approved materials and methods of construction. Construction codes are adopted to protect public health, safety and welfare by establishing minimum standards for materials and methods of construction. The City of Benbrook first adopted the Uniform Building Code in 1969 (Ordinance 262). The City adopted the current 2012 series in October 2013 (Ordinance 1357) and the 2014 National Electric Code in November 2014 (Ordinance 1378).

The North Central Texas Council of Governments (NCTCOG) encourages local governments to adopt the same building code series to provide builders comparable requirements from city to city. The NCTCOG recently recommended the adoption of the 2015 International Building Code series.

REGIONAL AND LOCAL AMENDMENTS

The NCTCOG established a Regional Codes Coordinating Committee (RCCC) in 1967 with the goal of coordinating and recommending a common set of building codes for North Central Texas. In 1983, NCTCOG recommended that all cities in the region adopt the Uniform Building Code (UBC) series, published by the International Conference of Building Officials (ICBO) over the outdated Southern Building Code (SBC). Instead of having two codes, the ICBO and the Southern Building Code Congress International (SBCCI) merged in 1994 to create one code council and publish codes that could be used throughout the United States. This merger created the International Code Council (ICC) and the first set of unified codes was published in 2000. Over the past several years, most cities have converted to the International Code. The NCTCOG also

SUBMITTED BY:	DISPOSITION BY COUNCIL: ☐ APPROVED ☐ OTHER (DESCRIBE)	PROCESSED BY: CITY SECRETARY
CITY MANAGER		DATE:

recommends the adoption of regional amendments (developed by the Regional Code Coordinating Committee) to adjust the International Code to serve local needs and conditions.

In September of 2015, NCTCOG recommended adoption of the following codes:

2015 International Building Code, with regional and local amendments
2015 International Residential Code, with regional and local amendments
2015 International Fire Code, with regional amendments
2015 International Plumbing Code, with regional and local amendments
2015 International Mechanical Code, with regional amendments
2015 International Fuel Gas Code, with regional amendments
2015 International Energy Conservation Code, with regional amendments and the
2014 National Electrical Code, with regional amendments

City Staff supports the recommendations with additional local amendments, as described below:

1. 2015 INTERNATIONAL BUILDING CODE

The NCTCOG proposes numerous regional amendments to the 2015 International Building Code. The new code changes are more consistent with the other codes (i.e.: Residential Code, Fire Code, Plumbing Code, etc.). The regional amendments reflect changes to provisions that are in conflict with regional construction practices. These changes will ultimately provide safer construction methods and practices.

2. 2015 INTERNATIONAL RESIDENTIAL CODE

The NCTCOG regional amendments to the 2015 International Residential Code are numerous and include (1) requiring smoke alarms in older houses in the same manner as new construction if any alterations, repairs or additions are made, (2) requiring carbon monoxide detectors in homes with fuel-fired appliances or attached garages and (3) minor revision of the wind/wall bracing section. Additional local amendments are proposed for changes in water heater installation, swimming pools, spa and hot tubs and lawn irrigation systems as required by the appropriate entity/agency.

3. 2015 INTERNATIONAL FIRE CODE

The NCTCOG recommends changes to provide better conformance to the International Building Code (IBC) and adjustments to serve the specific needs of the region. The NCTCOG regional amendments are minimal and no local amendments are proposed.

4. 2015 INTERNATIONAL PLUMBING CODE

The changes in the 2015 International Plumbing Code (IPC) are relatively minor and are consistent with State and Regional amendments and the International Building Code (IBC) and International Residential Code (IRC). The NCTCOG regional amendments provide for common and consistent interpretations. The local amendments change the requirements for water heater installations and provide protection of the potable water system when installing lawn irrigation (as required by the Benbrook Water Authority's rules and regulations).

5. 2015 INTERNATIONAL MECHANICAL CODE

The changes in the 2015 International Mechanical Code (IMC) are relatively minor. The central changes are related to ventilation, exhaust, duct installation and testing methods. The NCTCOG regional amendments are minimal and no local amendments are proposed.

6. 2015 INTERNATIONAL FUEL GAS CODE

The International Fuel Gas Code (IFGC) provides standards for combustion air, gaseous hydrogen systems, testing and various other items. The NCTCOG regional amendments change the IFGC to correspond with construction practices in the region. The NCTCOG regional amendments are minimal and no local amendments are proposed.

7. 2015 INTERNATIONAL ENERGY CONSERVATION CODE

The changes in the 2015 International Energy Conservation Code (IECC) are numerous and include (1) enhanced energy efficiency standards for residential and commercial construction, (2) a required minimum of 75 percent high-efficiency light bulbs/lamps (fluorescent or L.E.D.) in new construction and major renovation projects, (3) mandatory blower door and duct testing and inspection and (4) new Energy Rating Index (ERI) compliance method for residential buildings/units. NCTCOG regional amendments are minimal and include approved energy compliance software. All commercial projects will require inspections to be performed by a third-party state-certified commercial energy code inspector.

A complete list of the changes and the rationale behind the changes can be obtained from the Building Official.

RECOMMENDATION

Staff recommends that the City Council approve the attached ordinance adopting the:

2015 International Building Code, with regional and local amendments
2015 International Residential Code, with regional and local amendments
2015 International Fire Code, with regional amendments
2015 International Plumbing Code, with regional and local amendments
2015 International Mechanical Code, with regional amendments
2015 International Fuel Gas Code, with regional amendments, and
2015 International Energy Conservation Code, with regional amendments

as the official building and construction codes for the City of Benbrook effective September 1st, 2016.

ORDINANCE NO. 1396

AN ORDINANCE AMENDING CHAPTER 15 OF THE BENBROOK MUNICIPAL CODE (1985), AS AMENDED, BY ADOPTING THE 2015 EDITION OF THE INTERNATIONAL BUILDING CODE AND LOCAL AMENDMENTS; ADOPTING THE 2015 EDITION OF THE INTERNATIONAL RESIDENTIAL CODE AND LOCAL AMENDMENTS; ADOPTING THE 2015 EDITION OF THE INTERNATIONAL ENERGY CONSERVATION CODE AND LOCAL AMENDMENTS; ADOPTING THE 2015 EDITION OF THE INTERNATIONAL PLUMBING CODE AND LOCAL AMENDMENTS; ADOPTING THE 2015 EDITION OF THE INTERNATIONAL FUEL GAS CODE AND LOCAL AMENDMENTS; ADOPTING THE 2015 EDITION OF THE INTERNATIONAL FIRE CODE AND LOCAL AMENDMENTS; AND ADOPTING THE 2015 EDITION OF THE INTERNATIONAL MECHANICAL CODE AND LOCAL AMENDMENTS; PROVIDING FOR THE MODIFICATION OF THE CODES TO INCORPORATE LOCAL AMENDMENTS; PROVIDING FOR THE RECORDING OF THE BUILDING, RESIDENTIAL, ELECTRICAL, ENERGY CONSERVATION, PLUMBING, FUEL GAS, FIRE, AND MECHANICAL CODES AS A PUBLIC RECORD; PROVIDING THAT THIS ORDINANCE SHALL BE CUMULATIVE OF ALL ORDINANCES; PROVIDING A SEVERABILITY CLAUSE; PROVIDING FOR A PENALTY FOR VIOLATIONS; PROVIDING A SAVINGS CLAUSE; PROVIDING FOR PUBLICATION IN PAMPHLET FORM; PROVIDING FOR PUBLICATION IN THE OFFICIAL NEWSPAPER; AND PROVIDING AN EFFECTIVE DATE.

WHEREAS, the City of Benbrook is a home rule city acting under its charter adopted by the electorate pursuant to Article XI, Section 5 of the Texas Constitution and Chapter 9 of the Local Government Code; and

WHEREAS, the City Council has previously adopted Chapter 15 of the Benbrook Municipal Code (1985), as amended, which adopted the 2012 International Building Code, 2012 International Residential Code, 2012 International Energy Conservation Code, 2012 International Plumbing Code, 2012 International Fuel Gas Code, 2012 International Fire Code, and 2012 International Mechanical Code, and

WHEREAS, the City Council desires to adopt a more recent internationally-recognized Building Code, Residential Code, Energy Conservation Code, Plumbing Code, Fuel Gas Code, Fire Code, and Mechanical Code, containing construction standards regulating both methods of construction and materials' quality; and

WHEREAS; the City Council has reviewed the available codes and has determined that the 2015 Edition of the International Building Code, 2015 Edition of the International Residential Code, 2015 Edition of the International Energy Conservation Code, 2015 Edition of the International Plumbing Code, 2015

Edition of the International Fuel Gas Code, 2015 Edition of the International Fire Code, and the 2015 Edition of the International Mechanical Code most fully meets the needs of the City of Benbrook, Texas, and

WHEREAS; the City Council of the City of Benbrook, Texas, desires to provide a mechanism by which local modifications reflecting the unique needs of the City of Benbrook may be made when deemed appropriate; and

WHEREAS; the North Central Texas Council of Governments and City Staff have recommended adoption of certain amendments to the 2015 Edition of the International Building Code, 2015 Edition of the International Residential Code, 2015 Edition of the International Energy Conservation Code, 2015 Edition of the International Plumbing Code, 2015 Edition of the International Fuel Gas Code, 2015 Edition of the International Fire Code, and the 2015 Edition of the International Mechanical Code to reflect regionally accepted practice; and

WHEREAS; the City Council of the City of Benbrook, Texas, has determined that these regional and local amendments are in the public interest and therefore deems it advisable to amend the 2015 Edition of the International Building Code, 2015 Edition of the International Residential Code, 2015 Edition of the International Energy Conservation Code, 2015 Edition of the International Plumbing Code, 2015 Edition of the International Fuel Gas Code, 2015 Edition of the International Fire Code, and the 2015 Edition of the International Mechanical Code to incorporate these regional and local amendments;

NOW, THEREFORE, BE IT ORDAINED BY THE CITY COUNCIL OF THE CITY OF BENBROOK, TEXAS:

SECTION 1

That Section 15.04.010 of the Benbrook Municipal Code is hereby amended by adopting the 2015 Edition of the International Building Code published by the International Code Council, as the official building code of the City of Benbrook, Texas. This document is fully incorporated into this ordinance by reference as though copied into the ordinance in its entirety.

SECTION 2

That Section 15.040.020(B) of the Benbrook Municipal Code is hereby amended by amending the 2015 Edition of the International Building Code as shown in Exhibit “A” attached to this ordinance and incorporated by reference as though copied into this ordinance in its entirety.

SECTION 3

That Section 15.06.010 of the Benbrook Municipal Code is hereby amended by adopting the 2015 Edition of the International Residential Code published by the

International Code Council, as the official residential code of the City of Benbrook, Texas. This document is fully incorporated into this ordinance by reference as though copied into the ordinance in its entirety.

SECTION 4

That Section 15.06.020(B) of the Benbrook Municipal Code is hereby amended by amending the 2015 Edition of the International Residential Code as shown in Exhibit “B” attached to this ordinance and incorporated by reference as though copied into this ordinance in its entirety.

SECTION 5

That Section 15.10.010 of the Benbrook Municipal Code is hereby amended by adopting the 2015 Edition of the International Energy Conservation Code, published by the International Code Council as the official energy code of the City of Benbrook, Texas. This code is fully incorporated by reference as though copied into this ordinance in its entirety.

SECTION 6

That Section 15.10.020(B) of the Benbrook Municipal Code is hereby amended by amending the 2015 Edition of the International Energy Conservation Code, as shown in Exhibit “C” attached to this ordinance and incorporated by reference as though copied into this ordinance in its entirety.

SECTION 7

That Section 15.12.010 of the Benbrook Municipal Code is hereby amended by adopting the 2015 Edition of the International Plumbing Code, published by the International Code Council as the official plumbing code of the City of Benbrook, Texas. This code is fully incorporated by reference as though copied into this ordinance in its entirety.

SECTION 8

That Section 15.12.020(B) of the Benbrook Municipal Code is hereby amended by amending the 2015 Edition of the International Plumbing Code, as shown in Exhibit “D” attached to this ordinance and incorporated by reference as though copied into the ordinance in its entirety.

SECTION 9

That Section 15.14.010 of the Benbrook Municipal Code is hereby amended by adopting the 2015 Edition of the International Fuel Gas Code published by the International Code Council as the official fuel gas code of the City of Benbrook, Texas.

This code is fully incorporated by reference as though copied into this ordinance in its entirety.

SECTION 10

That Section 15.14.020(B) of the Benbrook Municipal Code is hereby amended by amending the 2015 Edition of the International Fuel Gas Code, as shown in Exhibit “E” attached to this ordinance and incorporated by reference as though copied into the ordinance in its entirety.

SECTION 11

That Section 15.16.010 of the Benbrook Municipal Code is hereby amended by adopting the 2015 Edition of the International Fire Code published by the International Code Council, as the official fire code of the City of Benbrook, Texas. This code is fully incorporated by reference as though copied into the ordinance in its entirety.

SECTION 12

That Section 15.16.070(B) of the Benbrook Municipal Code is hereby amended by emending the 2015 Edition of the International Fire Code, as shown in Exhibit “F” attached to the ordinance codified in this section and incorporated by reference as though copied in its entirety.

SECTION 13

That Section 15.24.010 of the Benbrook Municipal Code is hereby amended by adopting the 2015 Edition of the International Mechanical Code published by the International Code Council, as the official mechanical code of the City of Benbrook, Texas. This code is fully incorporated by reference as though copied into the ordinance in its entirety.

SECTION 14

That Section 15.24 020(B) of the Benbrook Municipal Code is hereby amended by amending the 2015 Edition of the International Mechanical Code, as shown in Exhibit “G” attached to this ordinance and incorporated by reference as though copied into the ordinance in its entirety.

SECTION 15

The material contained in Exhibits “A” through “G” to this ordinance, although fully adopted and incorporated by reference, shall not be included in the formal municipal codification of ordinances. The material contained in Exhibits “A” through “G” shall instead be maintained as a public record in the office of the City Secretary and the office of the Building Official. These exhibits will be available for public inspection and copying during regular business hours. The purpose of maintaining these records separate and apart from the municipal codification is to avoid the inclusion of detailed technical construction materials, subject to frequent change, which would unreasonably lengthen the code.

SECTION 16

This Ordinance shall be cumulative of all provisions of ordinances and of the Code of the City of Benbrook, Texas (1985), as amended, except where the provisions of this ordinance are in direct conflict with the provisions of such ordinances and such code, in which event the conflicting provisions of such ordinances and such Code are hereby repealed.

SECTION 17

It is hereby declared to be the intention of the City Council that the phrases, clauses, sentences, paragraphs and sections of this Ordinance are severable, and if any phrase, clause, sentence, paragraph or section of this Ordinance shall be declared unconstitutional by the valid judgment or decree of any court of competent jurisdiction, unconstitutionality shall not affect any of the remaining phrases, clauses, sentences, paragraphs or sections of this Ordinance since the same would have been enacted by the City Council without incorporation in this Ordinance of any such unconstitutional phrase, clause, sentence, paragraph or section.

SECTION 18

Any person, firm, or corporation who violates, disobeys, omits, neglects or refuses to comply with or who resists the enforcement of any of the provisions of this Ordinance shall be fined not more than Two Thousand Dollars ($2,000) for all violations involving zoning, fire safety or public health and sanitation, including dumping of refuse, and shall be fined not more than Five Hundred Dollars ($500.00) for all other violations of this Ordinance. Each day that a violation is permitted to exist shall constitute a separate offense.

SECTION 19

All rights and remedies of the City of Benbrook, Texas, are expressly saved as to any and all violations of the provisions of the Benbrook Municipal Code or any other ordinances affecting the issuance of permits and the payment of fees which have

accrued at the time of the effective date of this Ordinance; and, as to such accrued violations and all pending litigation, both civil and criminal, whether pending in court or not, under such ordinances same shall not be affected by this Ordinance but may be prosecuted until final disposition by the courts.

SECTION 20

The City Secretary of the City of Benbrook is hereby directed to engross and enroll this Ordinance by copying the caption, penalty clause, and effective date clause of this Ordinance in the Ordinance records of the City.

SECTION 21

That the City Secretary is hereby directed to publish the caption, penalty clause, publication clause and effective date clause of this Ordinance for two (2) days in the official newspaper of the City of Benbrook, Texas, as authorized by Section 52.013 of the Local Government Code.

SECTION 22

This Ordinance shall be in full force and effect from and after its passage and publication as provided by law, and it is so ordained.

PASSED AND APPROVED this 4th day of August, 2016.

_____
Jerry Dittrich, Mayor

ATTEST:

_____
Joanna King, City Secretary

Exhibit A

Recommended Amendments to the 2015 International Building Code

North Central Texas Council of Governments Region

The following sections, paragraphs, and sentences of the *2015 International Building Code* are hereby amended as follows:

Section 101.4; change to read as follows:

101.4 Referenced codes. The other codes listed in Sections 101.4.1 through 101.4.8 and referenced elsewhere in this code, when specifically adopted, shall be considered part of the requirements of this code to the prescribed extent of each such reference. Whenever amendments have been adopted to the referenced codes and standards, each reference to said code and standard shall be considered to reference the amendments as well. Any reference to NFPA 70 or the Electrical Code shall mean the National Electrical Code currently adopted.

Section 101.4.8; add the following:

101.4.8 Electrical. The provisions of the National Electrical Code shall apply to the installation of electrical systems, including alterations, repairs, replacement, equipment, appliances, fixtures, fittings and appurtenances thereto.

Section 103 and 103.1 amend to insert the Department Name:

CITY OF BENBROOK BUILDING PERMITS AND INSPECTIONS DEPARTMENT

103.1 Creation of enforcement agency. The City of Benbrook Building Permits and Inspections Department is hereby created and the official in charge thereof shall be known as the Building Official.

Section 105.2 Work exempt from permit; under sub-title entitled "Building" amend item 2 and delete item 10 and re-number as follows:

Building:

1. Unchanged
2. Fences not over 8 feet (2438 mm) high.
3. Unchanged
4. Unchanged
5. Unchanged
6. Unchanged
7. Unchanged
8. Unchanged
9. Unchanged

~~10.~~ *{Delete}*

~~11.~~ 10. (Unchanged)

~~12.~~ 11. (Unchanged)
~~13.~~ 12. (Unchanged)

Section 109; add Section 109.7 to read as follows:

109.7 Re-inspection Fee. A fee as established by city council resolution may be charged when:

1. The inspection called for is not ready when the inspector arrives;
2. No building address is clearly posted;
3. City approved plans are not on the job site available to the inspector;
4. The building is locked or work otherwise not available for inspection when called;
5. The job site is red-tagged or failed inspection twice for the same item;
6. Failure to maintain erosion control, trash control or tree protection.

Any re-inspection fees assessed shall be paid before any more inspections are made on that job site.

Section 109; add Section 109.8, 109.8.1, 109.8.2 and 109.9 to read as follows:

109.8 Work without a permit.

109.8.1 Investigation. Whenever work for which a permit is required by this code has been commenced without first obtaining a permit, a special investigation shall be made before a permit may be issued for such work.

109.8.2 Fee. An investigation fee, in addition to the permit fee, shall be collected whether or not a permit is subsequently issued. The investigation fee shall be equal to the amount of the permit fee required by this code or the city fee schedule as applicable. The payment of such investigation fee shall not exempt the applicant from compliance with all other provisions of either this code or the technical codes nor from penalty prescribed by law.

109.9 Unauthorized cover up fee. Any work concealed without first obtaining the required inspection in violation of Section 110 shall be assessed a fee as established by the city fee schedule.

Section 110.3.5; Lath, gypsum board and gypsum panel product inspection. Delete exception

---

Section 202; amend definition of Ambulatory Care Facility as follows:

AMBULATORY CARE FACILITY. Buildings or portions thereof used to provide medical, surgical, psychiatric, nursing or similar care on a less than 24-hour basis to individuals who are rendered incapable of self-preservation by the services provided. This group may include but not be limited to the following:

- Dialysis centers
- Sedation dentistry
- Surgery centers
- Colonic centers
- Psychiatric centers

Section 202; add definition of Assisting Living Facilities to read as follows.

ASSISTED LIVING FACILITIES. A building or part thereof housing persons, on a 24-hour basis, who because of age, mental disability or other reasons, live in a supervised residential environment which provides personal care services. The occupants are capable of responding to an emergency situation without physical assistance from staff.

Section 202; change definition of "Atrium" as follows:

ATRIUM. An opening connecting three or more stories… *{remainder unchanged}*

Section 202; amend definition to read as follows:

HIGH-RISE BUILDING. A building with an occupied floor located more than 55 feet (16,764 mm) above the lowest level of fire department vehicle access.

Section 202; add definition of "Repair Garage" as follows:

REPAIR GARAGE. A building, structure or portion thereof used for servicing or repairing motor vehicles. This occupancy shall also include garages involved in minor repair, modification and servicing of motor vehicles for items such as lube changes, inspections, windshield repair or replacement, shocks, minor part replacement and other such minor repairs.

Section 202; amend definition of SPECIAL INSPECTOR to read as follows:

SPECIAL INSPECTOR. A qualified person employed or retained by an approved agency who shall prove to the satisfaction of the registered design professional in responsible charge and the Building Official as having the competence necessary to inspect a particular type of construction requiring special inspection.

Section 303.1.3; add a sentence to read as follows:

303.1.3 Associated with Group E occupancies. A room or space used for assembly purposes that is associated with a Group E occupancy is not considered a separate occupancy except when applying the assembly requirements of Chapter 10 and 11.

Section 304.1; add the following to the list of occupancies:

Fire stations
Police stations with detention facilities for 5 or less

Section 307.1.1; add the following sentence to Exception 4:

4. Cleaning establishments…*{text unchanged}*…with Section 707 or 1-hour horizontal assemblies constructed in accordance with Section 711 or both. See also IFC Chapter 21, Dry Cleaning Plant provisions.

Section 403.1, Exception 3; change to read as follows:

3. The open air portion of a building *{remainder unchanged}*

Section 403.3, Exception; delete item 2.

Section 403.3.2; change to read as follows:

[F] 403.3.2 Water supply to required fire pumps. In buildings that are more than 120 feet (36.5 m) in building height, required fire pumps shall be supplied by connections to no fewer than two water mains located in different streets. Separate supply piping shall be provided between each connection to the water main and the pumps. Each connection and the supply piping between the connection and the pumps shall be sized to supply the flow and pressure required for the pumps to operate.

Exception: *{No change to exception}*

Section 404.5; delete Exception.

Section 406.3.5.1 Carport separation; add sentence to read as follows:

A fire separation is not required between a Group R-2 and U carport provided that the carport is entirely open on all sides and that the distance between the two is at least 10 feet (3048 mm).

Section 506.1.4; add to read as follows:

506.1.4 Open Space Limits. Such open space shall be either on the same lot or dedicated for public use and shall be accessed from a street or approved fire lane. In order to be considered as accessible, if not in direct contact with a street or fire lane, a minimum 10-foot wide pathway meeting fire department access from the street or approved fire lane shall be provided.

Section 712.1.9, change item 4 to* read *as follows:

4. Is not open to a corridor in Group I and H occupancies.

Section 901.6.1; add Section 901.6.1.1 to read as follows:

901.6.1.1 Standpipe Testing. Building owners/managers must maintain and test standpipe systems as per NFPA 25 requirements. The following additional requirements shall be applied to the testing that is required every 5 years:

1. The piping between the Fire Department Connection (FDC) and the standpipe shall be backflushed when foreign material is present, and also hydrostatically tested for all FDC's on any type of standpipe system. Hydrostatic testing shall also be conducted in accordance with NFPA 25 requirements for the different types of standpipe systems.
2. For any manual (dry or wet) standpipe system not having an automatic water supply capable of flowing water through the standpipe, the tester shall connect hose from a fire hydrant or portable pumping system (as approved by the Fire Code Official) to each FDC, and flow water through the standpipe system to the roof outlet to verify that each inlet connection functions properly. Confirm that there are no open hose valves prior to introducing water into a dry standpipe. There is no required pressure criteria at the outlet. Verify that check valves function properly and that there are no closed control valves on the system.
3. Any pressure relief, reducing, or control valves shall be tested in accordance with the requirements of NFPA 25. All hose valves shall be exercised.
4. If the FDC is not already provided with approved caps, the contractor shall install such caps for all FDC's as required by the Fire Code Official.
5. Upon successful completion of standpipe test, place a blue tag (as per Texas Administrative Code, Fire Sprinkler Rules for Inspection, Test and Maintenance Service (ITM) Tag) at the bottom of each standpipe riser in the building. The tag shall be check-marked as "Fifth Year" for Type of ITM, and the note on the back of the tag shall read "5 Year Standpipe Test" at a minimum.
6. The procedures required by Texas Administrative Code Fire Sprinkler Rules with regard to Yellow Tags and Red Tags or any deficiencies noted during the testing, including the required notification of the local Authority Having Jurisdiction (Fire Code Official) shall be followed.
7. Additionally, records of the testing shall be maintained by the owner and contractor, if applicable, as required by the State Rules mentioned above and NFPA 25.
8. Standpipe system tests where water will be flowed external to the building shall not be conducted during freezing conditions or during the day prior to expected night time freezing conditions.
9. Contact the Fire Code Official for requests to remove existing fire hose from Class II and III standpipe systems where employees are not trained in the utilization of this firefighting equipment. All standpipe hose valves must remain in place and be provided with an approved cap and chain when approval is given to remove hose by the Fire Code Official.

Section 903.1.1; change to read as follows:

[F] 903.1.1 Alternative protection. Alternative automatic fire-extinguishing systems complying with Section 904 shall be permitted in addition to automatic sprinkler protection where recognized by the applicable standard, or as *approved* by the Fire Code Official.

Section 903.2; add the following:

[F] 903.2 Where required. *Approved automatic sprinkler systems* in new buildings and structures shall be provided in the locations described in Sections 903.2.1 through 903.2.12. Automatic Sprinklers shall not be installed in elevator machine rooms, elevator machine spaces, and elevator hoistways, other than pits where such sprinklers would not necessitate shunt trip requirements under any circumstances. Storage shall not be allowed within the elevator machine room. Signage shall be provided at the entry doors to the elevator machine room indicating "ELEVATOR MACHINERY – NO STORAGE ALLOWED."

[F] ***Section 903.2; delete the exception.***

Section 903.2.9; add Section 903.2.9.3 to read as follows:

[F] 903.2.9.3 Self-service storage facility. An automatic sprinkler system shall be installed throughout all self-service storage facilities.

Section 903.2.11; change 903.2.11.3 and add 903.2.11.7, 903.2.11.8, and 903.2.11.9 as follows:

903.2.11.3 Buildings 35 feet or more in height. An automatic sprinkler system shall be installed throughout buildings that have one or more stories, other than penthouses in compliance with Section 1510 of the *International Building Code*, located 35 feet (10,668 mm) or more above the lowest level of fire department vehicle access, measured to the finished floor.

Exception:

1. Open parking structures in compliance with Section 406.5 of the *International Building Code,* having no other occupancies above the subject garage.
2. *{Delete}*

903.2.11.7 High-Piled Combustible Storage. For any building with a clear height exceeding 12 feet (4572 mm), see Chapter 32 of the IFC to determine if those provisions apply.

903.2.11.8 Spray Booths and Rooms. New and existing spray booths and spraying rooms shall be protected by an approved automatic fire-extinguishing system.

903.2.11.9 Buildings Over 6,000 sq.ft. An automatic sprinkler system shall be installed throughout all buildings with a building area 6,000 sq.ft. or greater and in all existing buildings that are enlarged to be 6,000 sq. ft. or greater. For the purpose of this provision, fire walls shall not define separate buildings.

Exception: Open parking garages in compliance with Section 406.5 of the *International Building Code*.

Section 903.3.1.1.1; change to read as follows:

[F] 903.3.1.1.1 Exempt locations. When approved by the *Fire Code Official*, automatic sprinklers shall not be required in the following rooms or areas where such*…{text unchanged}…* because it is damp, of fire-resistance-rated construction or contains electrical equipment.

1. Any room where the application of water, or flame and water, constitutes a serious life or fire hazard.
2. Any room or space where sprinklers are considered undesirable because of the nature of the contents, when approved by the code official.
3. Generator and transformer rooms, under the direct control of a public utility, separated from the remainder of the building by walls and floor/ceiling or roof/ceiling assemblies having a fire-resistance rating of not less than 2 hours.

~~4.~~ *{Delete}*

~~5.~~ 4. Elevator machine rooms, machinery spaces, and hoistways, other than pits where such sprinklers would not necessitate shunt trip requirements under any circumstances.

~~6.~~ *{Delete}*

Section 903.3.1.2.3; add section to read as follows:

[F] Section 903.3.1.2.3 Attics and Attached Garages. Sprinkler protection is required in attic spaces of such buildings two or more stories in height, in accordance with NFPA 13 and or NFPA 13R requirements, and attached garages.

Section 903.3.1.3; change to read as follows:

[F] 903.3.1.3 NFPA 13D sprinkler systems. *Automatic sprinkler systems* installed in one- and two-family *dwellings*; Group R-3; Group R-4 Condition 1 and *townhouses* shall be permitted to be installed throughout in accordance with NFPA 13D or in accordance with state law.

Section 903.3.1.4; add to read as follows:

[F] 903.3.1.4 Freeze protection. Freeze protection systems for automatic fire sprinkler systems shall be in accordance with the requirements of the applicable referenced NFPA standard and this section.

903.3.1.4.1 Attics. Only dry-pipe, pre-action, or listed antifreeze automatic fire sprinkler systems shall be allowed to protect attic spaces.

Exception: Wet-pipe fire sprinkler systems shall be allowed to protect non-ventilated attic spaces where:

1. The attic sprinklers are supplied by a separate floor control valve assembly to allow ease of draining the attic system without impairing sprinklers throughout the rest of the building, and
2. Adequate heat shall be provided for freeze protection as per the applicable referenced NFPA standard, and
3. The attic space is a part of the building's thermal, or heat, envelope, such that insulation is provided at the roof deck, rather than at the ceiling level.

903.3.1.4.2 Heat trace/insulation. Heat trace/insulation shall only be allowed where approved by the fire code official for small sections of large diameter water-filled pipe.

Section 903.3.5; add a second paragraph to read as follows:

[F] Water supply as required for such systems shall be provided in conformance with the supply requirements of the respective standards; however, every water-based fire protection system shall be designed with a 10 psi safety factor. Reference Section 507.4 for additional design requirements.

Section 903.4; add a second paragraph after the exceptions to read as follows:

[F] Sprinkler and standpipe system water-flow detectors shall be provided for each floor tap to the sprinkler system and shall cause an alarm upon detection of water flow for more than 45 seconds. All control valves in the sprinkler and standpipe systems except for fire department hose connection valves shall be electrically supervised to initiate a supervisory signal at the central station upon tampering.

Section 903.4.2; add second paragraph to read as follows:

[F] The alarm device required on the exterior of the building shall be a weatherproof horn/strobe notification appliance with a minimum 75 candela strobe rating, installed as close as practicable to the fire department connection.

Section 905.2; change to read as follows:

[F] 905.2 Installation standard. Standpipe systems shall be installed in accordance with this section and NFPA 14. Manual dry standpipe systems shall be supervised with a minimum of 10 psig and a maximum of 40 psig air pressure with a high/low alarm.

Section 905.3; add Section 905.3.9 and exception to read as follows:

[F] 905.3.9 Buildings exceeding 10,000 sq. ft. In buildings exceeding 10,000 square feet in area per story and where any portion of the building's interior area is more than 200 feet (60960 mm) of travel, vertically and horizontally, from the nearest point of fire department vehicle access, Class I automatic wet or manual wet standpipes shall be provided.

Exceptions:

1. Automatic dry and semi-automatic dry standpipes are allowed as provided for in NFPA 14.
2. R-2 occupancies of four stories or less in height having no interior corridors.

Section 905.4, change Item 1., 3., and 5. and add Item 7. to read as follows:

1. In every required exit stairway, a hose connection shall be provided for each story above and below grade plane. Hose connections shall be located at an intermediate landing between stories, unless otherwise approved by the Fire Code Official.
2. *{No change}*
3. In every exit passageway, at the entrance from the exit passageway to other areas of a building.
   Exception: Where floor areas adjacent to an exit passageway are reachable from an exit stairway hose connection by a…{*remainder unchanged*}
4. *{No change}*
5. Where the roof has a slope less than four units vertical in 12 units horizontal (33.3-percent slope), each standpipe shall be provided with a two-way hose connection located to serve the roof or at the highest landing of an exit stairway with stair access to the roof provided in accordance with Section 1011.12.
6. *{No change}*
7. When required by this Chapter, standpipe connections shall be placed adjacent to all required exits to the structure and at two hundred feet (200') intervals along major corridors thereafter, or as otherwise approved by the Fire Code Official.

Section 905.9; add a second paragraph after the exceptions to read as follows:

[F] Sprinkler and standpipe system water-flow detectors shall be provided for each floor tap to the sprinkler system and shall cause an alarm upon detection of water flow for more than 45 seconds. All control valves in the sprinkler and standpipe systems except for fire department hose connection valves shall be electrically supervised to initiate a supervisory signal at the central station upon tampering.

Section 907.1; add Section 907.1.4 and 907.1.4.1 to read as follows:

[F] 907.1.4 Design standards. Where a new fire alarm system is installed, the devices shall be addressable. Fire alarm systems utilizing more than 20 smoke detectors shall have analog initiating devices.

Section 907.2.1; change to read as follows:

[F] 907.2.1 Group A. A manual fire alarm system that activates the occupant notification system in accordance with Section 907.5 shall be installed in Group A occupancies having an occupant load of 300 or more persons or more than 100 persons above or below the lowest level of exit discharge. Group A occupancies not separated from one another in accordance with Section 707.3.–10 of the *International Building Code* shall be considered as a single occupancy for the purposes of applying this section. Portions of Group E occupancies occupied for assembly purposes shall be provided with a fire alarm system as required for the Group E occupancy.

Exception: *{No change}*

Activation of fire alarm notification appliances shall:

1. Cause illumination of the *means of egress* with light of not less than 1 foot-candle (11 lux) at the walking surface level, and
2. Stop any conflicting or confusing sounds and visual distractions.

Section 907.2.3; change to read as follows:

[F] 907.2.3 Group E. A manual fire alarm system that initiates the occupant notification signal utilizing an emergency voice/alarm communication system meeting the requirements of Section 907.5.2.2 and installed in accordance with Section 907.6 shall be installed in Group E educational occupancies. When *automatic sprinkler systems* or smoke detectors are installed, such systems or detectors shall be connected to the building fire alarm system. An approved smoke detection system shall be installed in Group E day care occupancies. Unless separated by a minimum of 100' open space, all buildings, whether portable buildings or the main building, will be considered one building for alarm occupant load consideration and interconnection of alarm systems.

Exceptions:

1. {No change}

1.1. Residential In-Home day care with not more than 12 children may use interconnected single station detectors in all habitable rooms. (For care of more than five children 2 1/2 or less years of age, see Section 907.2.6.)

{No change to remainder of exceptions}

Section 907.2.13, Exception 3; change to read as follows:

[F] 3. Open air portions of buildings with an occupancy in Group A-5 in accordance with Section 303.1 of the *International Building Code*; however, this exception does not apply to accessory uses including but not limited to sky boxes, restaurants and similarly enclosed areas.

Section 907.4.2; add Section 907.4.2.7 to read as follows:

[F] 907.4.2.7 Type. Manual alarm initiating devices shall be an approved double action type.

Section 907.6.1; add Section 907.6.1.1 to read as follows:

[F] 907.6.1.1 Wiring Installation. All fire alarm systems shall be installed in such a manner that a failure of any single initiating device or single open in an initiating circuit conductor will not interfere with the normal operation of other such devices. All signaling line circuits (SLC) shall be installed in such a way that a single open will not interfere with the operation of any addressable devices (Class A). Outgoing and return SLC conductors shall be installed in accordance with NFPA 72 requirements for Class A circuits and shall have a minimum of four feet separation horizontal and one foot vertical between supply and return circuit conductors. The initiating device circuit (IDC) from a signaling line circuit interface device may be wired Class B, provided the distance from the interface device to the initiating device is ten feet or less.

Section 907.6.3; delete all four Exceptions.

Section 907.6.6; – add sentence at end of paragraph to read as follows:

[F] See 907.6.3 for the required information transmitted to the supervising station.

Section 909.22; add to read as follows:

[F] 909.22 Stairway or ramp pressurization alternative. Where the building is equipped throughout with an automatic sprinkler system in accordance with Section 903.3.1.1 and the stair pressurization alternative is chosen for compliance with Building Code requirements for a smokeproof enclosure, interior exit stairways or ramps shall be pressurized to a minimum of 0.10 inches of water (25 Pa) and a maximum of 0.35 inches of water (87 Pa) in the shaft relative to the building measured with all interior exit stairway and ramp doors closed under maximum anticipated conditions of stack effect and wind effect. Such systems shall comply with Section 909, including the installation of a separate fire-fighter's smoke control panel as per Section 909.16, and a Smoke Control Permit shall be required from the Fire Department as per Section 105.7.

[F] 909.22.1 Ventilating equipment. The activation of ventilating equipment for the stair or ramp pressurization system shall be by smoke detectors installed at each floor level at an approved location at the entrance to the smokeproof enclosure. When the closing device for the stairway or ramp shaft and vestibule doors is activated by smoke detection or power failure, mechanical equipment shall activate and operate at the required performance levels. Smoke detectors shall be installed in accordance with Section 907.3.

[F] 909.22.1.1 Ventilation systems. Smokeproof enclosure ventilation systems shall be independent of other building ventilation systems. The equipment, control wiring, power wiring and ductwork shall comply with one of the following:

1. Equipment, control wiring, power wiring and ductwork shall be located exterior to the building and directly connected to the smokeproof enclosure or connected to the smokeproof enclosure by ductwork enclosed by not less than 2-hour fire barriers constructed in accordance with Section 707 of the Building Code or horizontal assemblies constructed in accordance with Section 711 of the Building Code, or both.
2. Equipment, control wiring, power wiring and ductwork shall be located within the smokeproof enclosure with intake or exhaust directly from and to the outside or through ductwork enclosed by not less than 2-hour barriers constructed in accordance with Section 707 of the Building Code or horizontal assemblies constructed in accordance with Section 711 of the Building Code, or both.
3. Equipment, control wiring, power wiring and ductwork shall be located within the building if separated from the remainder of the building, including other mechanical equipment, by not less than 2-hour fire barriers constructed in accordance with Section 707 of the Building Code or horizontal assemblies constructed in accordance with Section 711 of the Building Code, or both.

Exceptions:

1. Control wiring and power wiring utilizing a 2-hour rated cable or cable system.
2. Where encased with not less than 2 inches (51 mm) of concrete.
3. Control wiring and power wiring protected by a listed electrical circuit protective systems with a fire-resistance rating of not less than 2 hours.

[F] 909.22.1.2 Standby power. Mechanical vestibule and stairway and ramp shaft ventilation systems and automatic fire detection systems shall be provided with standby power in accordance with Section 2702 of the Building Code.

[F] 909.22.1.3 Acceptance and testing. Before the mechanical equipment is approved, the system shall be tested in the presence of the fire code official to confirm that the system is operating in compliance with these requirements.

Section 910.2; change Exception 2. and 3. to read as follows:

[F] 2. Only manual smoke and heat removal shall be required in areas of buildings equipped with early suppression fast-response (ESFR) sprinklers. Automatic smoke and heat removal is prohibited.

3. Only manual smoke and heat removal shall be required in areas of buildings equipped with control mode special application sprinklers with a response time index of $50(m*S)^{1/2}$ or less that are listed to control a fire in stored commodities with 12 or fewer sprinklers. Automatic smoke and heat removal is prohibited.

Section 910.2; add subsections 910.2.3 with exceptions to read as follows:

[F] 910.2.3 Group H. Buildings and portions thereof used as a Group H occupancy as follows:

1. In occupancies classified as Group H-2 or H-3, any of which are more than 15,000 square feet (1394 m^2) in single floor area.
   Exception: Buildings of noncombustible construction containing only noncombustible materials.
2. In areas of buildings in Group H used for storing Class 2, 3, and 4 liquid and solid oxidizers, Class 1 and unclassified detonable organic peroxides, Class 3 and 4 unstable (reactive) materials, or Class 2 or 3 water-reactive materials as required for a high-hazard commodity classification.
   Exception: Buildings of noncombustible construction containing only noncombustible materials.

Section 910.3; add section 910.3.4 to read as follows:

[F] 910.3.4 Vent operation. Smoke and heat vents shall be capable of being operated by approved automatic and manual means. Automatic operation of smoke and heat vents shall conform to the provisions of Sections 910.3.2.1 through 910.3.2.3.

[F] 910.3.4.1 Sprinklered buildings. Where installed in buildings equipped with an approved automatic sprinkler system, smoke and heat vents shall be designed to operate automatically.
The automatic operating mechanism of the smoke and heat vents shall operate at a temperature rating at least 100 degrees F (approximately 38 degrees Celsius) greater than the temperature rating of the sprinklers installed.

Exception: Manual only system per 910.2

[F] 910.3.4.2 Non-sprinklered buildings. Where installed in buildings not equipped with an approved automatic sprinkler system, smoke and heat vents shall operate automatically by actuation of a heat-responsive device rated at between 100°F (56°C) and 220°F (122°C) above ambient.

Exception: Listed gravity-operated drop out vents.

Section 910.4.3.1; change to read as follows:

[F] 910.4.3.1 Makeup air. Makeup air openings shall be provided within 6 feet (1829 mm) of the floor level. Operation of makeup air openings shall be automatic. The minimum gross area of makeup air inlets shall be 8 square feet per 1,000 cubic feet per minute (0.74 m2 per 0.4719 m3/s) of smoke exhaust.

Section 910.4.4; change to read as follows:

[F] 910.4.4 Activation. The mechanical smoke removal system shall be activated automatically by the automatic sprinkler system or by an approved fire detection system. Individual manual controls shall also be provided.

Exception: Manual only systems per Section 910.2.

Section 912.2; add Section 912.2.3 to read as follows:

[F] 912.2.3 Hydrant distance. An approved fire hydrant shall be located within 100 feet of the fire department connection as the fire hose lays along an unobstructed path.

Section 913.2.1; add second paragraph and exception to read as follows:

[F] When located on the ground level at an exterior wall, the fire pump room shall be provided with an exterior fire department access door that is not less than 3 ft. in width and 6 ft. – 8 in. in height, regardless of any interior doors that are provided. A key box shall be provided at this door, as required by Section 506.1.

Exception: When it is necessary to locate the fire pump room on other levels or not at an exterior wall, the corridor leading to the fire pump room access from the exterior of the building shall be provided with equivalent fire resistance as that required for the pump room, or as approved by the Fire Code Official. Access keys shall be provided in the key box as required by Section 506.1.

Section 1006.2.2.6 Add a new Section 1006.2.2.6 as follows:

1006.2.2.6 Electrical Rooms. For electrical rooms, special exiting requirements may apply. Reference the electrical code as adopted.

Section 1009.1; add the following Exception 4:

Exceptions:

{Previous exceptions unchanged}

4. Buildings regulated under State Law and built in accordance with State registered plans, including any variances or waivers granted by the State, shall be deemed to be in compliance with the requirements of Section 1009.

Section 1010.1.9.4 Bolt Locks; amend exceptions 3 and 4 as follows:

Exceptions:

3. Where a pair of doors serves an *occupant load* of less than 50 persons in a Group B, F, M or S occupancy. *{remainder unchanged}*
4. Where a pair of doors serves a Group A, B, F, M or S occupancy *{remainder unchanged}*

Section 1015.8; Revise text of item # 1 as follows:

1. Operable windows where the top of the sill of the opening is located more than 55 feet (16,764 mm) above the finished grade or other surface below and that are provided with window fall prevention devices that comply with ASTM F 2006.

Section 1020.1 Construction; add exception 6 to read as follows:

6. In group B occupancies, corridor walls and ceilings need not be of fire-resistive construction within a single tenant space when the space is equipped with approved automatic smoke-detection within the corridor. The actuation of any detector shall activate self-annunciating alarms audible in all areas within the corridor. Smoke detectors shall be connected to an approved automatic fire alarm system where such system is provided.

Section 1029.1.1.1 Delete this section; Spaces under grandstands and bleachers.

Section 1101.1 Scope; Add exception to Section 1101.1 as follows:

Exception: Components of projects regulated by and registered with Architectural Barriers Division of Texas Department of Licensing and Regulation shall be deemed to be incompliance with the requirements of this chapter.

Section 1203.1; amend to read as follows:

1203.1 General. Buildings shall be provided with natural ventilation in accordance with Section 1203.4, or mechanical ventilation in accordance with the *International Mechanical Code*.

Where air infiltration rate in a *dwelling unit* is 5 air changes or less per hour when tested with a blower door at a pressure 0.2 inch w.c. (50 Pa) in accordance with Section 402.4.1.2 of the *International Energy Conservation Code*, the *dwelling unit* shall be ventilated by mechanical means in accordance with Section 403 of the *International Mechanical Code*.

Table 1505.1; delete footnote c and replace footnote b with the following:

b. Non-classified roof coverings shall be permitted on buildings of U occupancies having not more than 120 sq. ft. of protected roof area. When exceeding 120 sq. ft. of protected roof area, buildings of U occupancies may use non-rated non-combustible roof coverings.

~~c.~~ *{Delete}*

Section 1505.7; delete the section

Section 1510.1; add a sentence to read as follows:

1510.1 General. Materials and methods of applications used for recovering or replacing an existing roof covering shall comply with the requirements of Chapter 15. All individual replacement shingles or shakes shall be in compliance with the rating required by Table 1505.1.

{Text of exception unchanged}

Section 1704.2, Special inspections and tests is amended to read as follows:

1704.2 Special inspections and tests. Where application is made to the Building Official for construction as specified in Section 105, the owner or the owner's authorized agent, or the registered design professional in responsible charge, other than the contractor, shall employ one or more approved agencies to provide special inspections and tests during construction on the types of work listed under

Section 1705 and identify the approved agencies to the Building Official. The special inspector shall not be employed by the contractor. These special inspections and tests are in addition to the inspections identified by the Building Official that are identified in Section 110.

Section 1704.2.1, Special inspector qualifications, is amended to read as follows:

1704.2.1 Special inspector qualifications. Prior to the start of construction and or upon request, the approved agencies shall provide written documentation to the registered design professional in responsible charge and the building official demonstrating the competence and relevant experience or training of the special inspectors who will perform the special inspections and tests during construction. *{remainder unchanged}*

Section 1704.2.4, Report requirement, is amended to read as follows:

1704.2.4 Report requirement. Approved agencies shall keep records of special inspections and tests. The approved agency shall submit reports of special inspections and tests to the Building Official upon request, and to the registered design professional in responsible charge. Individual inspection reports shall indicate that work inspected or tested was or was not completed in conformance to approved construction documents. *{remainder unchanged}*

Section 1704.2.5.1, Fabricator approval, is amended to read as follows:

1704.2.5.1 Fabricator approval. Special inspections during fabrications required by Section 1704 are not required where the work is done on the premises of a fabricator registered and approved to perform such work without special inspection. Approval shall be based upon review of the fabricator's written procedural and quality control manuals and periodic auditing of fabrication practices by an approved agency, or a fabricator that is enrolled in a nationally accepted inspections program. At completion of fabrication, the acceptable or approved fabricator shall submit a certificate of compliance to the owner or the owner's authorized agent or the registered design professional in responsible charge, stating that the work was performed in accordance with the approved construction documents. The certificate of compliance shall also be made available to the Building Official upon request.

Section 2901.1; add a sentence to read as follows:

[P] 2901.1 Scope. *{Existing text to remain}* The provisions of this Chapter are meant to work in coordination with the provisions of Chapter 4 of the International Plumbing Code. Should any conflicts arise between the two chapters, the Building Official shall determine which provision applies.

Section 2902.1; add a second paragraph to read as follows:

In other than E Occupancies, the minimum number of fixtures in Table 2902.1 may be lowered, if requested in writing, by the applicant stating reasons for a reduced number and approved by the Building Official.

Table 2902.1; add footnote f to read as follows:

f. Drinking fountains are not required in M Occupancies with an occupant load of 100 or less, B Occupancies with an occupant load of 25 or less, and for dining and/or drinking establishments.

Section 2902.1.3; add new Section 2902.1.3 to read as follows:

2902.1.3 Additional fixtures for food preparation facilities. In addition to the fixtures required in this Chapter, all food service facilities shall be provided with additional fixtures set out in this section.

2902.1.3.1 Hand washing lavatory. At least one hand washing lavatory shall be provided for use by employees that is accessible from food preparation, food dispensing and ware washing areas. Additional hand washing lavatories may be required based on convenience of use by employees.

2902.1.3.2 Service sink. In new or remodeled food service establishments, at least one service sink or one floor sink shall be provided so that it is conveniently located for the cleaning of mops or similar wet floor cleaning tool and for the disposal of mop water and similar liquid waste. The location of the service sink(s) and/or mop sink(s) shall be approved by the Tarrant County Health Department.

Section 3002.1 Hoistway Enclosure Protection. *Add exceptions to read as follows:*

Exceptions:

1. Elevators wholely located within atriums complying with Section 404 shall not require hoistway enclosure protection.

2. Elevators in open or enclosed parking garages that serve only the parking garage, and complying with Sections 406.5 and 406.6, respectively, shall not require hoistway enclosure protection.

Section 3005.4 Machine rooms, control rooms, machinery spaces and control spaces. *Revise text to read as follows:*

Elevator machine rooms, control rooms, control spaces and machinery spaces shall be enclosed with fire barriers constructed in accordance with Section 707 or horizontal assemblies constructed in accordance with Section 711, or both. *{remainder unchanged}*

Section 3005.7; *add Section 3005.7 as follows:*

3005.7 Fire Protection in Machine rooms, control rooms, machinery spaces and control spaces.

3005.7.1 **Automatic sprinkler system.** The building shall be equipped throughout with an automatic sprinkler system in accordance with Section 903.3.1.1, except as otherwise permitted by Section 903.3.1.1.1 and as prohibited by Section 3005.7.2.1.

3005.7.2.1 **Prohibited locations.** Automatic sprinklers shall not be installed in machine rooms, elevator machinery spaces, control rooms, control spaces and elevator hoist-ways.

3005.7.2.2 **Sprinkler system monitoring.** The sprinkler system shall have a sprinkler control valve supervisory switch and water-flow initiating device provided for each floor that is monitored by the building's fire alarm system.

3005.7.3 **Water protection.** An approved method to prevent water from infiltrating into the hoistway enclosure from the operation of the automatic sprinkler system outside the elevator lobby shall be provided.

3005.7.4 **Shunt trip.** Means for elevator shutdown in accordance with Section 3005.5 shall not be installed.

Section 3005.8; *add Section 3005.8 as follows:*

3005.8 Storage. Storage shall not be allowed within the elevator machine room, control room, machinery spaces and or control spaces. Provide approved signage at each entry to the above listed locations stating: "No Storage Allowed."

Section 3006.2, Hoistway opening protection required. *Revise text as follows:*

5. The building is a high rise and the elevator hoistway is more than 55 feet (16,764 mm) in height. The height of the hoistway shall be measured from the lowest floor at or above grade to the highest floors served by the hoistway.

Section 3109.1; change to read as follows:

3109.1 General. Swimming pools shall comply with the requirements of sections 3109.2 through 3109.5 and other applicable sections of this code and complying with applicable state laws.

Section 3109.3; *Revise text as follows:*

3109.3 Public swimming pools. Public swimming pools shall be completely enclosed by a fence not less than 5 feet (1,524 mm) in height…*{remainder unchanged}*

Section 3109.4.1; *Revise text as follows:*

3109.4.1 Barrier height and clearances. The top of the barrier shall not be less than 5 feet (1,524 mm) above grade…*{remainder unchanged}*

End

Exhibit B

Recommended Amendments to the 2015 International Residential Code

North Central Texas Council of Governments Region

The following sections, paragraphs, and sentences of the *2012 International Residential Code* are hereby amended as follows:

Section R102.4; change to read as follows:

R102.4 Referenced codes and standards. The *codes*, when specifically adopted, and standards referenced in this *code* shall be considered part of the requirements of this *code* to the prescribed extent of each such reference and as further regulated in Sections R102.4.1 and R102.4.2. Whenever amendments have been adopted to the referenced *codes* and standards, each reference to said *code* and standard shall be considered to reference the amendments as well. Any reference made to NFPA 70 or the *Electrical Code* shall mean the *Electrical Code* as adopted.

Section R104.10.1 Flood Hazard areas; delete this section.

Section R105.3.1.1& R106.1.4; delete these sections.

Section R110 (R110.1 through R110.5); delete the section.

Section R202; change definition of "Townhouse" to read as follows:

TOWNHOUSE. A single-family dwelling unit constructed in a group of three or more attached units separated by property lines in which each unit extends from foundation to roof and with a *yard* or *public way* on at least two sides.

Table R301.2 (1); fill in as follows:

GROUND SNOW LOAD	WIND DESIGN				SEISMIC DESIGN CATEGORY[f]	SUBJECT TO DAMAGE FROM			WINTER DESIGN TEMP[e]	ICE BARRIER UNDER-LAYMENT[h]	FLOOD HAZARDS[g]	AIR FREEZING INDEX[i]	MEAN ANNUAL TEMP[j]
	SPEED[d] (MPH)	Topographic Effects[k]	Special Wind Region[L]	Windborne Debris Zone[m]		Weathering[a]	Frost Line Depth[b]	Termite[c]					
5 lb/ft	115 (3 sec-gust)/ 76 fastest mile	No	No	No	A	Moderate	6"	Very Heavy	22^0 F	No	Local Code	150	64.9^0 F

Section R302.1; add exception #6 to read as follows:

Exceptions: *{previous exceptions unchanged}*

6. Open non-combustible carport structures may be constructed when also approved within adopted ordinances.

Section R302.3; add Exception #3 to read as follows:

Exceptions:

1. *{existing text unchanged}*
2. *{existing text unchanged}*
3. Two-family dwelling units that are also divided by a property line through the structure shall be separated as required for townhouses.

Section R302.5.1; change to read as follows:

R302.5.1 Opening protection. Openings from a private garage directly into a room used for sleeping purposes shall not be permitted. Other openings between the garage and residence shall be equipped with solid wood doors not less than 13/8 inches (35 mm) in thickness, solid or honeycomb core steel doors not less than 13/8 inches (35 mm) thick, or 20-minute fire-rated doors.

Section R303.3, Exception; amend to read as follows:

Exception: {existing text unchanged} Exhaust air from the space shall be exhaust out to the outdoors unless the space contains only a water closet, a lavatory, or water closet and a lavatory may be ventilated with an approved mechanical recirculating fan or similar device designed to remove odors from the air.

Section R313 Automatic Fire Sprinkler Systems. *Delete subsections in their entirety.*

In 2009, the State Legislature enacted SB 1410 prohibiting cities from enacting fire sprinkler mandates in residential dwellings.

Section R315.2.2 Alterations, repairs and additions. Amend to read as follows:

Exception:
2. Installation, alteration or repairs of electrical powered *{remaining text unchanged}*

Section R322 Flood Resistant Construction. Delete Section.

Section R326 Swimming Pools, Spas and Hot Tubs. Amended to read as follows:

R326.1 General. The design and construction of pools and spas shall comply with the **2015 IRC Appendix Q. Swimming Pools, Spas and Hot Tubs.**

Section R401.2, amended by adding a new paragraph following the existing paragraph to read as follows.

Section R401.2. Requirements. *{existing text unchanged} …*
Every foundation and/or footing, or any size addition to an existing post-tension foundation, regulated by this code shall be designed and sealed by a Texas-registered engineer.

Section R602.6.1; amend the following:

R602.6.1 Drilling and notching of top plate. When piping or ductwork is placed in or partly in an exterior wall or interior load-bearing wall, necessitating cutting, drilling or notching of the top plate by more than 50 percent of its width, a galvanized metal tie not less than 0.054 inch thick (1.37 mm) (16 Ga) and 5 inches (127 mm) wide shall be fastened across and to the plate at each side of the opening with not less than

eight 10d (0.148 inch diameter) having a minimum length of 1 ½ inches (38 mm) at each side or equivalent. Fasteners will be offset to prevent splitting of the top plate material. The metal tie must extend a minimum of 6 inches past the opening. See figure R602.6.1. *{remainder unchanged}*

Figure R602.6.1; delete the figure and insert the following figure:

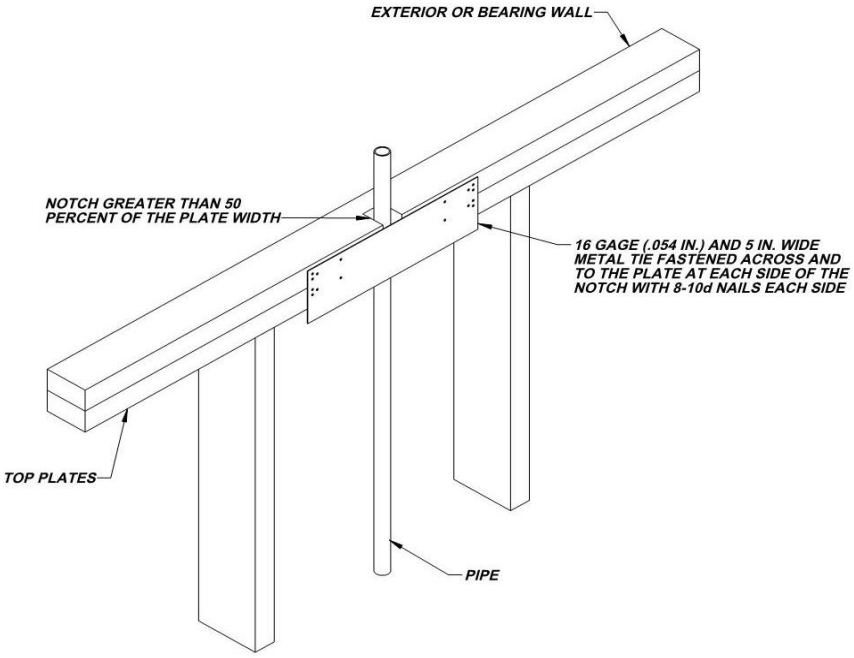

Section R703.8.4.1; add a second paragraph to read as follows:

In stud framed exterior wall**s**, all ties shall be anchored to studs as follows:

1. When studs are 16 in (407 mm) o.c., stud ties shall be spaced no further apart than 24 in (737 mm) vertically starting approximately 12 in (381 mm) from the foundation; or

2. When studs are 24 in (610 mm) o.c., stud ties shall be spaced no further apart than 16 in (483 mm) vertically starting approximately 8 in (254 mm) from the foundation.

Section R902.1; Amend and add exception # 5 to read as follows:

R902.1 Roofing covering materials. Roofs shall be covered with materials as set forth in Sections R904 and R905. Class A, B, or C roofing shall be installed. *{remainder unchanged}*

Exceptions:

1. *{text unchanged}*
2. *{text unchanged}*
3. *{text unchanged}*
4. *{text unchanged}*
5. Non-classified roof coverings shall be permitted on one-story detached *accessory structures* used as tool and storage sheds, playhouses and similar uses, provided the floor area does not exceed (area defined by jurisdiction).

Section M1305.1.3; change to read as follows:

M1305.1.3 Appliances in attics. *Attics* containing *appliances* shall be provided*…{bulk of paragraph unchanged}…*sides of the *appliance* where access is required. The clear access opening dimensions shall be a minimum of 20 inches by 30 inches (508 mm by 762 mm), or larger and large enough to allow removal of the largest *appliance*. A walkway to an appliance shall be rated as a floor as approved by the Building Official. As a minimum, for *access* to the attic space, provide one of the following:

1. A permanent stair.
2. A pull down stair with a minimum 300 lb (136 kg) capacity.
3. An *access* door from an upper floor level.

Exceptions:

1. The passageway and level service space are not required where the *appliance* can be serviced and removed through the required opening.
2. Where the passageway is unobstructed*…{remaining text unchanged}*

Section M1411.3; change to read as follows:

M1411.3 Condensate disposal. Condensate from all cooling coils or evaporators shall be conveyed from the drain pan outlet to a sanitary sewer through a trap, by means of a direct or indirect drain. *{remaining text unchanged}*

Section M1411.3.1, Items 3 and 4; add text to read as follows:

M1411.3.1 Auxiliary and secondary drain systems. *{bulk of paragraph unchanged}*

1. *{text unchanged}*
2. *{text unchanged}*
3. An auxiliary drain pan… *{bulk of text unchanged}…* with Item 1 of this section. A water level detection device may be installed only with prior approval of the Building Official.
4. A water level detection device… *{bulk of text unchanged}…* overflow rim of such pan. A water level detection device may be installed only with prior approval of the Building Official.

Section M1411.3.1.1; add text to read as follows:

M1411.3.1.1 Water-level monitoring devices. On down-flow units …*{bulk of text unchanged}*… installed in the drain line. A water level detection device may be installed only with prior approval of the Building Official.

M1503.4 Makeup Air Required. Amend and add exception as follows:

M1503.4 Makeup air required. Exhaust hood systems capable of exhausting in excess of 400 cubic feet per minute (0.19 m3/s) shall be provided with makeup air at a rate approximately equal to the difference between the exhaust air rate and 400 cubic feet per minute. Such makeup air systems shall be equipped with a means of closure and shall be automatically controlled to start and operate simultaneously with the exhaust system.

Exception: Where all appliances in the house are of sealed combustion, power-vent, unvented, or electric, the exhaust hood system shall be permitted to exhaust up to 600 cubic feet per minute (0.28 m3/s) without providing makeup air. Exhaust hood systems capable of exhausting in excess of 600 cubic feet per minute (0.28 m3/s) shall be provided with a makeup air at a rate approximately equal to the difference between the exhaust air rate and 600 cubic feet per minute.

Section M2005.2; change to read as follows:

M2005.2 Prohibited locations. Fuel-fired water heaters shall not be installed in a room used as a storage closet. Water heaters located in a bedroom or bathroom shall be installed in a sealed enclosure so that *combustion air* will not be taken from the living space. Access to such enclosure may be from the bedroom or bathroom when through a solid door, weather-stripped in accordance with the exterior door air leakage requirements of the *International Energy Conservation Code* and equipped with an *approved* self-closing device. Installation of direct-vent water heaters within an enclosure is not required.

Section G2408.3 (305.5); delete.

Section G2415.2.1 (404.2.1); add a second paragraph to read as follows:

Both ends of each section of medium pressure gas piping shall identify its operating gas pressure with an *approved* tag. The tags are to be composed of aluminum or stainless steel and the following wording shall be stamped into the tag:

"WARNING: 1/2 to 5 psi gas pressure - Do Not Remove"

Section G2415.2.2 (404.2.2); add an exception to read as follows:

Exception: Corrugated stainless steel tubing (CSST) shall be a minimum of 1/2" (18 EDH).

Section G2415.12 (404.12); change to read as follows:

G2415.12 (404.12) Minimum burial depth. Underground *piping systems* shall be installed a minimum depth of 18 inches (457 mm) below grade.

Section G2417.1 (406.1); change to read as follows:

G2417.1 (406.1) General. Prior to acceptance and initial operation, all *piping* installations shall be inspected and *pressure tested* to determine that the materials, design, fabrication, and installation practices comply with the requirements of this *code*. The *permit* holder shall make the applicable tests prescribed in Sections 2417.1.1 through 2417.1.5 to determine compliance with the provisions of this *code*. The *permit* holder shall give reasonable advance notice to the *building official* when the *piping system* is ready for testing. The *equipment*, material, power and labor necessary for the inspections and test shall be furnished by the *permit* holder and the *permit* holder shall be responsible for determining that the work will withstand the test pressure prescribed in the following tests.

Section G2417.4; change to read as follows:
G2417.4 (406.4) Test pressure measurement. Test pressure shall be measured with a monometer or with a pressure-measuring device designed and calibrated to read, record, or indicate a pressure loss caused by leakage during the pressure test period. The source of pressure shall be isolated before the pressure tests are made.

Section G2417.4.1; change to read as follows:

G2417.4.1 (406.4.1) Test pressure. The test pressure to be used shall be no less than 3 psig (20 kPa gauge), or at the discretion of the Code Official, the piping and valves may be tested at a pressure of at least six (6) inches (152 mm) of mercury, measured with a manometer or slope gauge. For tests requiring a pressure of 3 psig, diaphragm gauges shall utilize a dial with a minimum diameter of three and one half inches (3 ½”), a set hand, 1/10 pound incrementation and pressure range not to exceed 6 psi for tests requiring a pressure of 3 psig. For tests requiring a pressure of 10 psig, diaphragm gauges shall utilize a

dial with a minimum diameter of three and one-half inches (3 ½”), a set hand, a minimum of 2/10 pound incrementation and a pressure range not to exceed 20 psi. For welded piping, and for piping carrying gas at pressures in excess of fourteen (14) inches water column pressure (3.48 kPa) (1/2 psi) and less than 200 inches of water column pressure (52.2 kPa) (7.5 psi), the test pressure shall not be less than ten (10) pounds per square inch (69.6 kPa). For piping carrying gas at a pressure that exceeds 200 inches of water column (52.2 kPa) (7.5 psi), the test pressure shall be not less than one and one-half times the proposed maximum working pressure. Diaphragm gauges used for testing must display a current calibration and be in good working condition. The appropriate test must be applied to the diaphragm gauge used for testing.

Section G2417.4.2; change to read as follows:

G2417.4.2 (406.4.2) Test duration. The test duration shall be held for a length of time satisfactory to the Building Official, but in no case for less than fifteen (15) minutes. For welded *piping*, and for *piping* carrying gas at pressures in excess of fourteen (14) inches water column pressure (3.48 kPa), the test duration shall be held for a length of time satisfactory to the Building Official, but in no case for less than thirty (30) minutes.

Section G2420.1 (409.1); add Section G2420.1.4 to read as follows:

G2420.1.4 Valves in CSST installations. Shutoff *valves* installed with corrugated stainless steel (CSST) *piping systems* shall be supported with an approved termination fitting, or equivalent support, suitable for the size of the *valves*, of adequate strength and quality, and located at intervals so as to prevent or damp out excessive vibration but in no case greater than 12-inches from the center of the *valve*. Supports shall be installed so as not to interfere with the free expansion and contraction of the system's *piping*, fittings, and *valves* between anchors. All *valves* and supports shall be designed and installed so they will not be disengaged by movement of the supporting *piping*.

Section G2420.5.1 (409.5.1); add text to read as follows:

G2420.5.1 (409.5.1) Located within the same room. The shutoff valve…*{bulk of paragraph unchanged}…* in accordance with the appliance manufacturer’s instructions. A secondary shutoff valve must be installed within 3 feet (914 mm) of the firebox if appliance shutoff is located in the firebox.

Section G2421.1 (410.1); add text and Exception to read as follows:

G2421.1 (410.1) Pressure regulators. A line *pressure regulator* shall be*… {bulk of paragraph unchanged}… approved* for outdoor installation. Access to *regulators* shall comply with the requirements for access to *appliances* as specified in Section M1305.

> **Exception:** A passageway or level service space is not required when the *regulator* is capable of being serviced and removed through the required *attic* opening.

Section G2422.1.2.3 (411.1.3.3); delete Exception 1 and Exception 4.

Section G2445.2 (621.2); add Exception to read as follows:

G2445.2 (621.2) Prohibited use. One or more *unvented room heaters* shall not be used as the sole source of comfort heating in a *dwelling unit*.

> **Exception:** Existing *approved unvented room heaters* may continue to be used in *dwelling units*, in accordance with the *code* provisions in effect when installed, when *approved* by the Building Official unless an unsafe condition is determined to exist as described in *International Fuel Gas Code* Section 108.7 of the Fuel Gas Code.

Section G2448.1.1 (624.1.1); change to read as follows:

G2448.1.1 (624.1.1) Installation requirements. The requirements for *water heaters* relative to access, sizing, *relief valves*, drain pans and scald protection shall be in accordance with this *code.*

Section P2801.6.1; change to read as follows:

Section P2801.6.1 Pan size and drain. The pan shall be not less than 1 1/2 inches (38 mm) in depth and shall be of sufficient size and shape to receive all dripping or condensate from the tank or water heater. The pan shall be drained by an indirect waste pipe having a diameter of not less than 3/4 inch (19 mm). Piping for safety pan drains shall be of those materials listed in Table 605.4. Multiple pan drains may terminate to a single discharge piping system when *approved* by the administrative authority and permitted by the manufacturer's installation instructions and installed with those instructions.

Section P2801.7; add Exception to read as follows:

Exceptions:

1. Electric Water Heater.

Section P2804.6.1; change to read as follows:

Section P2804.6.1 Requirements for discharge piping. The discharge piping serving a pressure relief valve, temperature relief valve or combination thereof shall:

1. Not be directly connected to the drainage system.
2. Discharge through an air gap.
3. Not be smaller than the diameter of the outlet of the valve served and shall discharge full size to the air gap.
4. Serve a single relief device and shall not connect to piping serving any other relief device or equipment.
   Exception: Multiple relief devices may be installed to a single T & P discharge piping system when approved by the administrative authority and permitted by the manufactures installation instructions and installed with those instructions.
5. Discharge to an indirect waste receptor or to the outdoors.
   {remainder unchanged}

Local Amendments:

1. Use of flexible copper on discharge piping serving a pressure-relief valve, temperature-relief valve or combination valve is prohibited.
2. When a water heater is located in the interior of a building/residence with no method to drain the pan according to this code, a water alarm and shut-off device shall be installed.
3. If the discharge piping serving a pressure-relief valve, temperature-relief valve or combination valve is unable to be discharged to the outside according to this code, alternate discharge means or methods may be approved by the Code Official on a case by case basis.

Section P2902.5.3; change to read as follows:

P2902.5.3 Lawn irrigation systems. The potable water supply to lawn irrigation systems shall be protected against backflow by an atmospheric-type vacuum breaker, a pressure-type vacuum breaker, a double-check assembly or a reduced pressure principle backflow preventer. A valve shall not be installed downstream from an atmospheric vacuum breaker. Where chemicals are introduced into the system, the potable water supply shall be protected against backflow by a reduced pressure principle backflow preventer.

Local Amendments:

Refer to the Benbrook Water Authority's "Landscape Irrigation Rules" for local requirements

---

Section P3009.9.2; change to read as follows and delete exception:

P3003.9.2. Solvent cementing. Joint surfaces shall be clean and free from moisture. A purple primer that conforms to ASTM F 656 shall be applied. Solvent cement not purple in color and conforming to ASTM D 2564, CSA B137.3, CSA B181.2 or CSA B182.1 shall be applied to all joint surfaces. The joint shall be made while the cement is wet and shall be in accordance with ASTM D 2855. Solvent cement joints shall be permitted above or below ground.

Section P3111; delete.

Section P3112.2; delete and replace with the following:

P3112.2 Installation. Traps for island sinks and similar equipment shall be roughed in above the floor and may be vented by extending the vent as high as possible, but not less than the drainboard height and then returning it downward and connecting it to the horizontal sink drain immediately downstream from the vertical fixture drain. The return vent shall be connected to the horizontal drain through a wye-branch fitting and shall, in addition, be provided with a foot vent taken off the vertical fixture vent by means of a wye-branch immediately below the floor and extending to the nearest partition and then through the roof to the open air or may be connected to other vents at a point not less than six (6) inches (152 mm) above the flood level rim of the fixtures served. Drainage fittings shall be used on all parts of the vent below the floor level and a minimum slope of one-quarter (1/4) inch per foot (20.9 mm/m) back to the drain shall be maintained. The return bend used under the drain-board shall be a one (1) piece fitting or an assembly of a forty-five (45) degree (0.79 radius), a ninety (90) degree (1.6 radius) and a forty-five (45) degree (0.79 radius) elbow in the order named. Pipe sizing shall be as elsewhere required in this Code. The island sink drain, upstream of the return vent, shall serve no other fixtures. An accessible cleanout shall be installed in the vertical portion of the foot vent.

Appendix Q Reserved. Amended to read as follows:

Appendix Q. Swimming Pools, Spas and Hot Tubs.

SECTION AQ101 GENERAL

AQ101.1 General. The provisions of this appendix shall control the design and construction of swimming pools, spas and hot tubs installed in or on the lot of a one- or two-family dwelling.

AQ101.2 Pools in flood hazard areas. Pools that are located in flood hazard areas established by Table R301.2(1), including above-ground pools, on-ground pools and in-ground pools that involve placement of fill, shall comply with Section AQ101.2.1 or AQ101.2.2.

Exception: Pools located in riverine flood hazard areas which are outside of designated floodways.

AQ101.2.1 Pools located in designated floodways. Where pools are located in designated floodways, documentation shall be submitted to the Building Official which demonstrates that the construction of the pool will not increase the design flood elevation at any point within the jurisdiction.

AQ101.2.2 Pools located where floodways have not been designated. Where pools are located where design flood elevations are specified but floodways have not been designated, the applicant shall provide a floodway analysis that demonstrates that the proposed pool will not increase the design flood elevation more than 1 foot (305 mm) at any point within the jurisdiction.

SECTION AQ102 DEFINITIONS

AQ102.1 General. For the purposes of these requirements, the terms used shall be defined as follows and as set forth in Chapter 2.

ABOVE-GROUND/ON-GROUND POOL. See "Swimming pool."

BARRIER. A fence, wall, building wall or combination thereof which completely surrounds the swimming pool and obstructs access to the swimming pool.

HOT TUB. See "Swimming pool."

IN-GROUND POOL. See "Swimming pool."

RESIDENTIAL. That which is situated on the premises of a detached one- or two-family dwelling, or a one-family townhouse not more than three stories in height.

SPA, NONPORTABLE. See "Swimming pool."

SPA, PORTABLE. A nonpermanent structure intended for recreational bathing, in which all controls, water-heating and water-circulating equipment are an integral part of the product.

SWIMMING POOL. Any structure intended for swimming or recreational bathing that contains water more than 24 inches (610 mm) deep. This includes in-ground, above-ground and on-ground swimming pools, hot tubs and spas.

SWIMMING POOL, INDOOR. A swimming pool which is totally contained within a structure and surrounded on all four sides by the walls of the enclosing structure.

SWIMMING POOL, OUTDOOR. Any swimming pool which is not an indoor pool.

SECTION AG103 SWIMMING POOLS

AQ103.1 In-ground pools. In-ground pools shall be designed and constructed in compliance with ANSI/NSPI-5.

AQ103.2 Above-ground and on-ground pools. Above-ground and on-ground pools shall be designed and constructed in compliance with ANSI/NSPI-4.

AQ103.3 Pools in flood hazard areas. In flood hazard areas established by Table R301.2(1), pools in coastal high-hazard areas shall be designed and constructed in compliance with ASCE 24.

SECTION AQ104 SPAS AND HOT TUBS

AQ104.1 Permanently installed spas and hot tubs. Permanently installed spas and hot tubs shall be designed and constructed in compliance with ANSI/NSPI-3.

AQ104.2 Portable spas and hot tubs. Portable spas and hot tubs shall be designed and constructed in compliance with ANSI/NSPI-6.

SECTION AQ105 BARRIER REQUIREMENTS

AQ105.1 Application. The provisions of this appendix shall control the design of barriers for residential swimming pools, spas and hot tubs. These design controls are intended to provide protection against potential drownings and near-drownings by restricting access to swimming pools, spas and hot tubs.

AQ105.2 Outdoor swimming pool. An outdoor swimming pool, including an in-ground, above-ground or on-ground pool, hot tub or spa shall be surrounded by a barrier which shall comply with the following:

1. The top of the barrier shall be at least 60 inches (1524 mm) above grade measured on the side of the barrier, which faces away from the swimming pool. The maximum vertical clearance between grade and the bottom of the barrier shall be 2 inches (51 mm) measured on the side of the barrier, which faces away from the swimming pool. Where the top of the pool structure is above grade, such as an above-ground pool, the barrier may be at ground level, such as the pool structure, or mounted on top of the pool structure. Where the barrier is mounted on top of the pool structure, the maximum vertical clearance between the top of the pool structure and the bottom of the barrier shall be 4 inches (102 mm).
2. Openings in the barrier shall not allow passage of a 4-inch-diameter (102 mm) sphere.
3. Solid barriers which do not have openings, such as a masonry or stone wall, shall not contain indentations or protrusions except for normal construction tolerances and tooled masonry joints.
4. Where the barrier is composed of horizontal and vertical members, and the distance between the tops of the horizontal members is 45 inches (1143 mm) or more, the horizontal members shall be located on the swimming pool side of the fence. If circumstances arise where the barrier cannot be installed, alternate methods may be authorized by the Building Official on a case by case basis. Spacing between vertical members shall not exceed 1.75 inches (44mm) in width. Where there are decorative cutouts within vertical members, spacing within the cutouts shall not exceed 1.75 inches (44 mm) in width.
5. Where the barrier is composed of horizontal and vertical members and the distance between the tops of the horizontal members is 45 inches (1143 mm) or more, spacing between vertical members shall not exceed 4 inches (102 mm). Where there are decorative cutouts within vertical members, spacing within the cutouts shall not exceed 1.75 inches (44 mm) in width.
6. Maximum mesh size for chain link fences shall be a 2.25-inch (57 mm) square unless the fence is provided with slats fastened at the top or the bottom which reduce the openings to not more than 1.75 inches (44 mm).
7. Where the barrier is composed of diagonal members, such as a lattice fence, the maximum opening formed by the diagonal members shall not be more than 1.75 inches (44 mm).
8. Access gates shall comply with the requirements of Section AQ105.2, Items 1 through 7, and shall be equipped to accommodate a locking device. Pedestrian access gates shall open outward away from the pool and shall be self-closing and have a self-latching device. Gates other than pedestrian access gates shall have a self-latching device. Where the release mechanism of the self-latching device is located less than 54 inches (1372 mm) from the bottom of the gate, the release mechanism and openings shall comply with the following:

8.1. The release mechanism shall be located on the pool side of the gate at least 3 inches (76 mm) below the top of the gate, and

8.2. The gate and barrier shall have not opening greater than 0.5 inch (13 mm) within 18 inches (457 mm) of the release mechanism.

9. Where a wall of a dwelling serves a part of the barrier one of the following conditions shall be met:

9.1. The pool shall be equipped with a powered safety cover in compliance with ASTM F1346; or

9.2. Doors with direct access to the pool through that wall shall be equipped with an alarm which produces an audible warning when the door and/or its screen, if present, are opened. The alarm shall be listed and labeled in accordance with UL 2017. The deactivation switch(es) shall be located at least 54 inches (1372 mm) above the threshold of the door; or

9.3. Other means of protection, such as self-closing doors with self-latching devices, which are approved by the governing body, shall be acceptable as long as the degree of protection afforded is not less than the protection afforded by Item 9.1 or 9.2 described above.

10. Where an above-ground pool structure is used as a barrier or where the barrier is mounted on top of the pool structure, and the means of access is a ladder or steps, then:

10.1. The ladder or steps shall be capable of being secured, locked or removed to prevent access, or

10.2. The ladder or steps shall be surrounded by a barrier which meets the requirements of Section AQ105.2, Items 1 through 9. When the ladder or steps are secured, locked or removed, any opening created shall not allow the passage of a 4-inchdiameter (102 mm) sphere.

AQ105.3 Indoor swimming pool. Walls surrounding an indoor swimming pool shall comply with Section AQ105.2, Item 9.

AQ105.4 Prohibited locations. Barriers shall be located so as to prohibit permanent structures, equipment or similar objects from being used to climb them.

AQ105.5 Barrier exceptions. Spas or hot tubs with a safety cover which complies with ASTM F 1346, as listed in Section AQ107, shall be exempt from the provisions of this appendix

SECTION AQ106 ENTRAPMENT PROTECTION FOR SWIMMING POOL AND SPA SUCTION OUTLETS

AQ106.1 General. Suction outlets shall be designed and installed in accordance with ANSI/APSP-7.

SECTION AQ107 ABBREVIATIONS

AQ107.1 General.

ANSI—American National Standards Institute
11 West 42nd Street
New York, NY 10036

APSP—Association of Pool and Spa Professionals
NSPI—National Spa and Pool Institute
2111 Eisenhower Avenue
Alexandria, VA 22314

ASCE—American Society of Civil Engineers
1801 Alexander Bell Drive
Reston, VA 98411-0700

ASTM—ASTM International
100 Barr Harbor Drive
West Conshohocken, PA 19428

UL—Underwriters Laboratories, Inc.
333 Pfingsten Road
Northbrook, IL 60062-2096

SECTION AQ108 REFERENCED STANDARDS

AQ108.1 General.

ANSI/NSP

ANSI/NSPI-3—99	Standard for Permanently Installed Residential Spas	AQ104.1
ANSI/NSPI-4—99	Standard for Above-ground/ On-ground Residential Swimming Pools	AQ103.2
ANSI/NSPI-5—03	Standard for Residential In-ground Swimming Pools	AQ103.1
ANSI/NSPI-6—99	Standard for Residential Portable Spas	AQ104.2

ANSI/APSP

ANSI/APSP-7—06	Standard for Suction Entrapment Avoidance in Swimming Pools, Wading Pools, Spas, Hot Tubs and Catch Basins	AQ106.1

ASCE

ASCE/SEI-24—05	Flood-resistant Design and Construction	AQ103.3

ASTM

ASTM F 1346—91 (2003)	Performance Specification for Safety Covers and Labeling Requirements for All Covers for Swimming Pools Spas and Hot Tubs	AQ105.2, AQ105.5

UL

UL 2017—2000	Standard for General-purpose Signaling Devices and Systems—with revisions through June 2004	AQ105.2

END

EXHIBIT C

Recommended Amendments to the 2015 International Energy Conservation Code

North Central Texas Council of Governments Region
(Climate Zone 3 of the IECC)

The following sections, paragraphs, and sentences of the *2015 International Energy Conservation Code* (IECC) are hereby amended as follows:

Section C102/R102; add Section C102.1.2 and R102.1.2 to read as follows:

C102.1.2 Alternative compliance. A building certified by a national, state, or local accredited energy efficiency program and determined by the Energy Systems Laboratory to be in compliance with the energy efficiency requirements of this section may, at the option of the Building Official, be considered in compliance. The United States Environmental Protection Agency's Energy Star Program certification of energy code equivalency shall be considered in compliance.

R102.1.2 Alternative compliance. A building certified by a national, state, or local accredited energy efficiency program and determined by the Energy Systems Laboratory to be in compliance with the energy efficiency requirements of this section may, at the option of the Building Official, be considered in compliance. The United States Environmental Protection Agency's Energy Star Program certification of energy code equivalency shall be considered in compliance. Regardless of the program or the path to compliance, each 1- and 2-family dwelling shall be tested for air and duct leakage as prescribed in Section R402.4 and R403.3.3 respectively.

Section C202 and R202; add the following definition:

PROJECTION FACTOR. The ratio of the horizontal depth of the overhang, eave or permanently attached shading device, divided by the distance measured vertically from the bottom of the fenestration glazing to the underside of the overhang, eave or permanently attached shading device.

Section R202; add the following definition:

DYNAMIC GLAZING. Any fenestration product that has the fully reversible ability to change it performance properties, including *U*-factor, solar heat gain coefficient (SHGC), or visible transmittance (VT).

Section C402.2.7/R402.2; Add Section C402.2.7 and R402.2.14 to read as follows:

Section C402.2.7/R402.2.14 Insulation installed in walls. To insure that insulation remains in place, insulation installed in walls shall be totally enclosed on all sides consisting of framing lumber, gypsum, sheathing, wood structural panel sheathing, netting or other equivalent material approved by the Building Official.

Section R402.3.2 Glazed fenestration SHGC; amend by adding a paragraph and table following the exception to read as follows:

Where vertical fenestration is shaded by an overhang, eave, or permanently attached shading device, the SHGC required in Table R402.1.2 shall be reduced by using the multipliers in Table R402.3.2 SHGC Multipliers for Permanent Projections.

Table R402.3.2 SHGC Multipliers for Permanent Projections [a]

Projection Factor	SHGC Multiplier (all Other Orientation)	SHGC Multiplier (North Oriented)
0 - 0.10	1.00	1.00
>0.10 – 0.20	0.91	0.95
>0.20 – 0.30	0.82	0.91
>0.30 – 0.40	0.74	0.87
>0.40 – 0.50	0.67	0.84
>0.50 – 0.60	0.61	0.81
>0.60 – 0.70	0.56	0.78
>0.70 – 0.80	0.51	0.76
>0.80 – 0.90	0.47	0.75
>0.90 – 1.00	0.44	0.73

[a] North oriented means within 45 degrees of true north.

R402.4.1.2 Testing; Add a last paragraph to read as follows:

Mandatory testing shall only be performed by individuals that are certified to perform air infiltration testing certified by national or state organizations as approved by the Building Official. The certified individuals must be an independent third-party entity, and may not be employed; or have any financial interest in the company that constructs the structure.

R403.3.3 Duct Testing (Mandatory). Add a last paragraph to read as follows:

Mandatory testing shall only be performed by individuals that are certified to perform duct testing leakage testing certified by national or state organizations as approved by the Building Official. The certified individuals must be an independent third-party entity, and may not be employed; or have any financial interest in the company that constructs the structure.

Section R405.6.2; add the following sentence to the end of paragraph:

Acceptable performance software simulation tools may include, but are not limited to, REM Rate™, Energy Gauge and IC3. Other performance software programs accredited by RESNET BESTEST and having the ability to provide a report as outlined in R405.4.2 may also be deemed acceptable performance simulation programs and may be considered by the building official.

***TABLE R406.4 MAXIMUM ENERGY RATING INDEX;* amend to read as follows**:

TABLE R406.4[1]
MAXIMUM ENERGY RATING INDEX

CLIMATE ZONE	ENERGY RATING INDEX
3	65

[1] This table is effective until August 31, 2019.

TABLE R406.4[2]
MAXIMUM ENERGY RATING INDEX

CLIMATE ZONE	ENERGY RATING INDEX
3	63

[2] The table is effective from September 1, 2019 to August 31, 2022.

TABLE R406.4[3]
MAXIMUM ENERGY RATING INDEX

CLIMATE ZONE	ENERGY RATING INDEX
3	59

[3] This table is effective on or after September 1, 2022.

END

Exhibit D

Recommended Amendments to the 2015 International Plumbing Code

North Central Texas Council of Governments Region

The following sections, paragraphs, and sentences of the *2015 International Plumbing Code* are hereby amended as follows:

Table of Contents, Chapter 7, Section 714; change to read as follows:

714 Engineered Drainage Design 69

Section 102.8; change to read as follows:

102.8 Referenced codes and standards. The codes and standards referenced in this code shall be those that are listed in Chapter 15 and such codes, when specifically adopted, and standards shall be considered as part of the requirements of this code to the prescribed extent of each such reference. Where the differences occur between provisions of this code and the referenced standards, the provisions of this code shall be the minimum requirements. Whenever amendments have been adopted to the referenced codes and standards, each reference to said code and standard shall be considered to reference the adopted amendments. Any reference to NFPA 70 or the *National Electrical Code* (NEC) shall mean the Electrical Code as adopted.

Sections 106.6.2 and 106.6.3; change to read as follows:

106.6.2 Fee schedule. The fees for all plumbing work shall be as adopted by resolution of the governing body of the jurisdiction.

106.6.3 Fee Refunds. The Building Official shall establish a policy for authorizing the refunding of fees. *{Delete balance of section}*

Section 109; delete entire section and insert the following:

SECTION 109
MEANS OF APPEAL

109.1 Application for appeal. Any person shall have the right to appeal a decision of the Building Official to the board of appeals established by ordinance. The board shall be governed by the enabling ordinance.

Section 305.4.1; change to read as follows:

305.4.1 Sewer depth. Building sewers shall be a minimum of 12 inches (304 mm) below grade.

Section 305.7; change to read as follows:

305.7 Protection of components of plumbing system. Components of a plumbing system installed within 3 feet along alleyways, driveways, parking garages or other locations in a manner in which they could be exposed to damage shall be recessed into the wall or otherwise protected in an *approved* manner.

Section 314.2.1; change to read as follows:

314.2.1 Condensate disposal. Condensate from all cooling coils and evaporators shall be conveyed from the drain pan outlet to an *approved* place of disposal…*{text unchanged}*…Condensate shall not discharge into a street, alley, sidewalk, rooftop, or other areas so as to cause a nuisance.

Section 409.2; change to read as follows:

409.2 Water connection. The water supply to a commercial dishwashing machine shall be protected against backflow by an air gap or backflow preventer in accordance with Section 608. *{Remainder of section unchanged}*

Section 412.4; change to read as follows:

412.4 Required location for floor drains. Floor drains shall be installed in the following areas.

1. In public coin-operated laundries and in the central washing facilities of multiple family dwellings, the rooms containing automatic clothes washers shall be provided with floor drains located to readily drain the entire floor area. Such drains shall have a minimum outlet of not less than 3 inches (76 mm) in diameter.
2. Commercial kitchens. In lieu of floor drains in commercial kitchens, the code official may accept floor sinks.
3. Public restrooms.

Section 419.3; change to read as follows:

419.3 Surrounding material. Wall and floor space to a point 2 feet (610 mm) in front of a urinal lip and 4 feet (1219 mm) above the floor and at least 2 feet (610 mm) to each side of the urinal shall be waterproofed with a smooth, readily cleanable, hard, nonabsorbent material.

Section 502.3; change to read as follows:

502.3 Appliances in attics. Attics containing a water heater shall be provided…{bulk of paragraph unchanged}…side of the water heater. The clear access opening dimensions shall be a minimum of 20 inches by 30 inches (508 mm by 762 mm), or larger where such dimensions be not less than 20 inches by 30 inches(508mm by 762mm) where such dimensions are large enough to allow removal of the water heater. A walkway to an appliance shall be rated as a floor as approved by the Building Official. As a minimum, for access to the attic space, provide one of the following:

1. A permanent stair.
2. A pull down stair with a minimum 300 lb (136 kg) capacity.
3. An access door from an upper floor level.

4. Access Panel may be used in lieu of items 1, 2, and 3 with prior approval of the Building Official due to building conditions.

Exceptions:

1. The passageway and level service space are not required where the appliance is capable of being serviced and removed…*{remainder of section unchanged}*

Section 502.6; add Section 502.6 to read as follows:

502.6 Water heaters above ground or floor. When the attic, roof, mezzanine or platform in which a water heater is installed is more than eight (8) feet (2438 mm) above the ground or floor level, it shall be made accessible by a stairway or permanent ladder fastened to the building.

Exception: A max 10 gallon water heater (or larger with approval) is capable of being accessed through a lay-in ceiling and a water heater is installed is not more than ten (10) feet (3048 mm) above the ground or floor level and may be reached with a portable ladder.

Section 504.6; change to read as follows:

504.6 Requirements for discharge piping. The discharge piping serving a pressure relief valve, temperature relief valve or combination thereof shall:

1. Not be directly connected to the drainage system.
2. Discharge through an air gap.
3. Not be smaller than the diameter of the outlet of the valve served and shall discharge full size to the air gap.
4. Serve a single relief device and shall not connect to piping serving any other relief device or equipment.
   Exception: Multiple relief devices may be installed to a single T & P discharge piping system when *approved* by the administrative authority and permitted by the manufactures installation instructions and installed with those instructions.
5. Discharge to an indirect waste receptor or to the outdoors.
6. Discharge in a manner that does not cause personal injury or structural damage.
7. Discharge to a termination point that is readily observable by the building occupants.
8. Not be trapped.
9. Be installed so as to flow by gravity.
10. Terminate not more than 6 inches above and not less than two times the discharge pipe diameter above the floor or flood level rim of the waste receptor.
11. Not have a threaded connection at the end of such piping.
12. Not have valves or tee fittings.
13. Be constructed of those materials listed in Section 605.4 or materials tested, rated and *approved* for such use in accordance with ASME A112.4.1.

Local Amendments:

1. Use of flexible copper on discharge piping serving a pressure-relief valve, temperature-relief valve or combination valve is prohibited.
2. When a water heater is located in the interior of a building/residence with no method to drain the pan according to this code, a water alarm or shut-off device shall be installed.

3. If the discharge piping serving a pressure-relief valve, temperature-relief valve or combination valve is unable to be discharged to the outside according to this code, alternate discharge means or methods may be approved by the Code Official on a case by case basis.

Section 504.7.1; change to read as follows:

Section 504.7.1 Pan size and drain to read as follows: The pan shall be not less than 11/2 inches (38 mm) in depth and shall be of sufficient size and shape to receive all dripping or condensate from the tank or water heater. The pan shall be drained by an indirect waste pipe having a diameter of not less than 3/4 inch (19 mm). Piping for safety pan drains shall be of those materials listed in Table 605.4. Multiple pan drains may terminate to a single discharge piping system when *approved* by the administrative authority and permitted by the manufactures installation instructions and installed with those instructions.

Section 604.4; add Section 604.4.1 to read as follows:

604.4.1 State maximum flow rate. Where the State mandated maximum flow rate is more restrictive than those of this section, the State flow rate shall take precedence.

Section 606.1; delete items #4 and #5.

Section 606.2; change to read as follows:

606.2 Location of shutoff valves. Shutoff valves shall be installed in the following locations:

1. On the fixture supply to each plumbing fixture other than bathtubs and showers in one- and two family residential occupancies, and other than in individual sleeping units that are provided with unit shutoff valves in hotels, motels, boarding houses and similar occupancies.

~~2.~~ *{Delete}*

~~3.~~2. On the water supply pipe to each appliance or mechanical equipment.

Section 608.1; change to read as follows:

608.1 General. A potable water supply system shall be designed, installed and maintained in such a manner so as to prevent contamination from non-potable liquids, solids or gases being introduced into the potable water supply through cross-connections or any other piping connections to the system. Backflow preventer applications shall conform to applicable local regulations, Table 608.1, and as specifically stated in Sections 608.2 through 608.16.10.

Section 608.16.5; change to read as follows:

608.16.5 Connections to lawn irrigation systems.
The potable water supply to lawn irrigation systems shall be protected against backflow by an atmospheric-type vacuum breaker, a pressure-type vacuum breaker, a double-check assembly or a reduced pressure principle backflow preventer. A valve shall not be installed downstream from an atmospheric vacuum breaker. Where chemicals are introduced into the system, the potable water supply shall be protected against backflow by a reduced pressure principle backflow preventer.

Local Amendments:

Refer to the Benbrook Water Authority's "Landscape Irrigation Rules" for local requirements.

Section 608.17; change to read as follows:

608.17 Protection of individual water supplies. An individual water supply shall be located and constructed so as to be safeguarded against contamination in accordance with applicable local regulations. Installation shall be in accordance with Sections 608.17.1 through 608.17.8.

Section 610.1; add exception to read as follows:

610.1 General. New or repaired potable water systems shall be purged of deleterious matter and disinfected prior to utilization. The method to be followed shall be that prescribed by the health authority or water purveyor having jurisdiction or, in the absence of a prescribed method, the procedure described in either AWWA C651 or AWWA C652, or as described in this section. This requirement shall apply to "on-site" or "in-plant" fabrication of a system or to a modular portion of a system.

1. The pipe system shall be flushed with clean, potable water until dirty water does not appear at the points of outlet.
2. The system or part thereof shall be filled with a water/chlorine solution containing at least 50 parts per million (50 mg/L) of chlorine, and the system or part thereof shall be valved off and allowed to stand for 24 hours; or the system or part thereof shall be filled with a water/chlorine solution containing at least 200 parts per million (200 mg/L) of chlorine and allowed to stand for 3 hours.
3. Following the required standing time, the system shall be flushed with clean potable water until the chlorine is purged from the system.
4. The procedure shall be repeated where shown by a bacteriological examination that contamination remains present in the system.
   Exception: With prior approval the Building Official may wave this requirement when deemed un-necessary.

Section 703.6; Delete

Section 704.5; added to read as follows:

***704.5* Single stack fittings.** Single stack fittings with internal baffle, PVC schedule 40 or cast iron single stack shall be designed by a registered engineer and comply to a national recognized standard.

Section 705.11.2; change to read as follows:

705.11.2 Solvent cementing. Joint surfaces shall be clean and free from moisture. A purple primer that conforms to ASTM F 656 shall be applied. Solvent cement not purple in color and conforming to ASTM D 2564, CSA B137.3, CSA B181.2 or CSA B182.1 shall be applied to all joint surfaces. The joint shall be made while the cement is wet and shall be in accordance with ASTM D 2855. Solvent cement joints shall be permitted above or below ground.

Section 712.5; add Section 712.5 to read as follows:

712.5 Dual Pump System. All sumps shall be automatically discharged and, when in any "public use" occupancy where the sump serves more than 10 fixture units, shall be provided with dual pumps or

ejectors arranged to function independently in case of overload or mechanical failure. For storm drainage sumps and pumping systems, see Section 1113.

Section 714, 714.1; change to read as follows:

SECTION 714
ENGINEERED DRAINAGE DESIGN

714.1 Design of drainage system. The sizing, design and layout of the drainage system shall be designed by a registered engineer using *approved* design methods.

Section 804.2; added to read as follows:

804.2 Special waste pipe, fittings, and components. Pipes, fittings, and components receiving or intended to receive the discharge of any fixture into which acid or corrosive chemicals are placed shall be constructed of CPVC, high silicone iron, PP, PVDF, chemical resistant glass, or glazed ceramic materials.

Section 903.1; change to read as follows:

903.1 Roof extension. Open vent pipes that extend through a roof shall terminate not less than six (6) inches (152 mm) above the roof. Where a roof is to be used for assembly or as a promenade, observation deck, sunbathing deck or similar purposes, open vent pipes shall terminate not less than 7 feet (2134 mm) above the roof.

Section 917 Single stack vent system. Delete entire section.

Section 1002.10; delete.

Section 1003; see note below:

Local Amendments:

Refer to the Benbrook Water Authority for interceptors and separators information and requirements.

Section 1101.8; change to read as follows:

1101.8 Cleanouts required. Cleanouts or manholes shall be installed in the storm drainage system and shall comply with the provisions of this code for sanitary drainage pipe cleanouts.

Section 1106.1; change to read as follows:

1106.1 General. The size of the vertical conductors and leaders, building storm drains, building storm sewers, and any horizontal branches of such drains or sewers shall be based on six (6) inches per hour rainfall rate.

Section 1108.3; change to read as follows:

1108.3 Sizing of secondary drains. Secondary (emergency) roof drain systems shall be sized in accordance with Section 1106. Scuppers shall be sized to prevent the depth of ponding water from exceeding that for which the roof was designed as determined by Section 1101.7. Scuppers shall not have an opening dimension of less than 4 inches (102 mm). The flow through the primary system shall not be considered when sizing the secondary roof drain system.

Section 1109; delete this section.

Section 1202.1; delete Exception 2.

END

Exhibit E

Recommended Amendments to the 2015 International Fuel Gas Code

North Central Texas Council of Governments Region

The following sections, paragraphs, and sentences of the *2015 International Fuel Gas Code* are hereby amended as follows:

Section 101.2; change to read as follows:

[A] 101.2 Scope. This code shall apply to the installation of fuel-gas *piping* systems, fuel gas appliances, gaseous hydrogen systems and related accessories in accordance with Section 101.2.1 through 101.2.5 and with the State Plumbing Licensing Law.

Exception: *{remainder unchanged}*

Section 102.2; add an exception to read as follows:

Exception: Existing dwelling units shall comply with Section 621.2.

Section 102.8; change to read as follows:

102.8 Referenced codes and standards. The codes and standards referenced in this code shall be those that are listed in Chapter 8 and such codes, when specifically adopted, and standards shall be considered part of the requirements of this code to the prescribed extent of each such reference. Where differences occur between provisions of this code and the referenced standards, the provisions of this code shall apply. Whenever amendments have been adopted to the referenced codes and standards, each reference to said code and standard shall be considered to reference the amendments as well.

Section 306.3; change to read as follows:

[M] 306.3 Appliances in attics. Attics containing appliances shall be provided*…{bulk of paragraph unchanged}…*side of the *appliance*. The clear *access* opening dimensions shall be a minimum of 20 inches by 30 inches (508 mm by 762 mm), or larger where such dimensions are not large enough to allow removal of the largest *appliance.* A walkway to an appliance shall be rated as a floor as approved by the Building Official. As a minimum, for *access* to the attic space, provide one of the following:

1. A permanent stair.
2. A pull down stair with a minimum 300 lb (136 kg) capacity.
3. An *access* door from an upper floor level.
4. Access Panel may be used in lieu of items 1, 2, and 3 with prior approval of the Building Official due to building conditions.

Exceptions:

1. The passageway and level service space are not required where the *appliance* is capable of being serviced and removed through the required opening.
2. Where the passageway is not less than…*{bulk of section to read the same}*.

Section 306.5; change to read as follows:

[M] 306.5 Equipment and appliances on roofs or elevated structures. Where *equipment* requiring *access* or appliances are located on an elevated structure or the roof of a building such that personnel will have to climb higher than 16 feet (4877 mm) above grade to access, a permanent interior or exterior means of access shall be provided. Permanent exterior ladders providing roof *access* need not extend closer than 12 feet (2438 mm) to the finish grade or floor level below and shall extend to the *equipment* and appliances' level service space. Such *access* shall…*{bulk of section to read the same}*…on roofs having a slope greater than 4 units vertical in 12 units horizontal (33-percent slope)…*{bulk of section to read the same}*.

Section 306.5.1; change to read as follows:

[M] 306.5.1 Sloped roofs. Where appliances, *equipment*, fans or other components that require service are installed on a roof having a slope of 3 units vertical in 12 units horizontal (25-percent slope) or greater and having an edge more than 30 inches (762 mm) above grade at such edge, a catwalk at least 16 inches in width with substantial cleats spaced not more than 16 inches apart shall be provided from the roof *access* to a level platform at the appliance. The level platform shall be provided on each side of the appliance to which *access* is required for service, repair or maintenance. The platform shall be not less than 30 inches (762 mm) in any dimension and shall be provided with guards. The guards shall extend not less than 42 inches (1067 mm) above the platform, shall be constructed so as to prevent the passage of a 21-inch-diameter (533 mm) sphere and shall comply with the loading requirements for guards specified in the *International Building Code*.

Section 306; add Section 306.7 to read as follows:

306.7 Water heaters above ground or floor. When the attic, roof, mezzanine or platform in which a water heater is installed is more than eight (8) feet (2438 mm) above the ground or floor level, it shall be made accessible by a stairway or permanent ladder fastened to the building.

Section 401.5; add a second paragraph to read as follows:

Both ends of each section of medium pressure gas piping shall identify its operating gas pressure with an *approved* tag. The tags are to be composed of aluminum or stainless steel and the following wording shall be stamped into the tag:

"WARNING
1/2 to 5 psi gas pressure
Do Not Remove"

Section 402.3; add an exception to read as follows:

Exception: Corrugated stainless steel tubing (CSST) shall be a minimum of 1/2" (18 EHD).

Section 404.12; change to read as follows:

404.12 Minimum burial depth. Underground piping systems shall be installed a minimum depth of 18 inches (458 mm) top of pipe below grade.

Section 406.1; change to read as follows:

406.1 General. Prior to acceptance and initial operation, all piping installations shall be inspected and pressure tested to determine that the materials, design, fabrication, and installation practices comply with the requirements of this code. The permit holder shall make the applicable tests prescribed in Sections

406.1.1 through 406.1.5 to determine compliance with the provisions of this code. The permit holder shall give reasonable advance notice to the Building Official when the piping system is ready for testing. The equipment, material, power and labor necessary for the inspections and test shall be furnished by the permit holder and the permit holder shall be responsible for determining that the work will withstand the test pressure prescribed in the following tests.

Section 406.4; change to read as follows:

406.4 Test pressure measurement. Test pressure shall be measured with a monometer or with a pressure-measuring device designed and calibrated to read, record, or indicate a pressure loss caused by leakage during the pressure test period. The source of pressure shall be isolated before the pressure tests are made.

Section 406.4.1; change to read as follows:

406.4.1 Test pressure. The test pressure to be used shall be no less than 3 psig (20 kPa gauge), or at the discretion of the Building Official, the piping and valves may be tested at a pressure of at least six (6) inches (152 mm) of mercury, measured with a manometer or slope gauge. For tests requiring a pressure of 3 psig, diaphragm gauges shall utilize a dial with a minimum diameter of three and one half inches (3 ½”), a set hand, 1/10 pound incrementation and pressure range not to exceed 6 psi for tests requiring a pressure of 3 psig. For tests requiring a pressure of 10 psig, diaphragm gauges shall utilize a dial with a minimum diameter of three and one-half inches (3 ½”), a set hand, a minimum of 2/10 pound incrementation and a pressure range not to exceed 20 psi. For welded piping, and for piping carrying gas at pressures in excess of fourteen (14) inches water column pressure (3.48 kPa) (1/2 psi) and less than 200 inches of water column pressure (52.2 kPa) (7.5 psi), the test pressure shall not be less than ten (10) pounds per square inch (69.6 kPa). For piping carrying gas at a pressure that exceeds 200 inches of water column (52.2 kPa) (7.5 psi), the test pressure shall be not less than one and one-half times the proposed maximum working pressure.

Diaphragm gauges used for testing must display a current calibration and be in good working condition. The appropriate test must be applied to the diaphragm gauge used for testing.

Section 406.4.2; change to read as follows:

406.4.2 Test duration. Test duration shall be held for a length of time satisfactory to the Building Official, but in no case for less than fifteen (15) minutes. For welded piping, and for piping carrying gas at pressures in excess of fourteen (14) inches water column pressure (3.48 kPa), the test duration shall be held for a length of time satisfactory to the Building Official, but in no case for less than thirty (30) minutes. *{Delete remainder of section}*

Section 409.1; add Section 409.1.4 to read as follows:

409.1.4 Valves in CSST installations. Shutoff valves installed with corrugated stainless steel (CSST) piping systems shall be supported with an *approved* termination fitting, or equivalent support, suitable for the size of the valves, of adequate strength and quality, and located at intervals so as to prevent or damp out excessive vibration but in no case greater than 12-inches from the center of the valve. Supports shall be installed so as not to interfere with the free expansion and contraction of the system's piping, fittings, and valves between anchors. All valves and supports shall be designed and installed so they will not be disengaged by movement of the supporting piping.

Section 410.1; add a second paragraph and exception to read as follows:

Access to regulators shall comply with the requirements for *access* to appliances as specified in Section 306.

> **Exception:** A passageway or level service space is not required when the regulator is capable of being serviced and removed through the required attic opening.

Section 621.2; add exception as follows:

621.2 Prohibited use. One or more unvented room heaters shall not be used as the sole source of comfort heating in a dwelling unit.

> **Exception:** Existing approved unvented heaters may continue to be used in dwelling units, in accordance with the code provisions in effect when installed, when approved by the Building Official unless an unsafe condition is determined to exist as described in Section 108.7.

END

Exhibit F

Recommended Amendments to the 2015 International Fire Code

North Central Texas Council of Governments Region

The following sections, paragraphs, and sentences of the *2015 International Fire Code* (IFC) are hereby amended as follows:

Section 102.1; change #3 to read as follows:

3. Existing structures, facilities, and conditions when required in Chapter 11 or in specific sections of this code.

Section 105.3.3; change to read as follows:

105.3.3 Occupancy Prohibited before Approval. The building or structure shall not be occupied prior to the Fire Code Official issuing a permit when required and conducting associated inspections indicating the applicable provisions of this code have been met.

Section 105.7; add Section 105.7.19 to read as follows:

105.7.19 Electronic access control systems. Construction permits are required for the installation or modification of an electronic access control system, as specified in Chapter 10. A separate construction permit is required for the installation or modification of a fire alarm system that may be connected to the access control system. Maintenance performed in accordance with this code is not considered a modification and does not require a permit.

[B] AMBULATORY CARE FACILITY. Buildings or portions thereof used to provide medical, surgical, psychiatric, nursing, or similar care on a less than 24-hour basis to persons who are rendered incapable of self-preservation by the services provided. This group may include but not be limited to the following:

- Dialysis centers
- Procedures involving sedation
- Sedation dentistry
- Surgery centers
- Colonic centers
- Psychiatric centers

[B] ATRIUM. An opening connecting three or more stories…*{remaining text unchanged}*

[B] DEFEND IN PLACE. A method of emergency response that engages building components and trained staff to provide occupant safety during an emergency. Emergency response involves remaining in place, relocating within the building, or both, without evacuating the building.

FIRE WATCH. A temporary measure intended to ensure continuous and systematic surveillance of a building or portion thereof by one or more qualified individuals or standby personnel when required by the Fire Code Official, for the purposes of identifying and controlling fire hazards, detecting early signs of unwanted fire, raising an alarm of fire and notifying the fire department.

FIREWORKS. Any composition or device for the purpose of producing a visible or an audible effect for entertainment purposes by combustion, *deflagration*, *detonation*, and/or activated by ignition with a match or other heat producing device that meets the definition of 1.4G fireworks or 1.3G fireworks as set forth herein*…{remainder of text unchanged}*

HIGH-PILED COMBUSTIBLE STORAGE: add a second paragraph to read as follows:

Any building classified as a group S Occupancy or Speculative Building exceeding 6,000 sq. ft. that has a clear height in excess of 14 feet, making it possible to be used for storage in excess of 12 feet, shall be considered to be high-piled storage. When a specific product cannot be identified, a fire protection system and life safety features shall be installed as for Class IV commodities, to the maximum pile height.

HIGH-RISE BUILDING. A building with an occupied floor located more than 55 feet (16764 mm) above the lowest level of fire department vehicle access.

REPAIR GARAGE. A building, structure or portion thereof used for servicing or repairing motor vehicles. This occupancy shall also include garages involved in minor repair, modification and servicing of motor vehicles for items such as lube changes, inspections, windshield repair or replacement, shocks, minor part replacement, and other such minor repairs.

SELF-SERVICE STORAGE FACILITY. Real property designed and used for the purpose of renting or leasing individual storage spaces to customers for the purpose of storing and removing personal property on a self-service basis.

STANDBY PERSONNEL. Qualified fire service personnel, approved by the Fire Chief. When utilized, the number required shall be as directed by the Fire Chief. Charges for utilization shall be as normally calculated by the jurisdiction.

UPGRADED OR REPLACED FIRE ALARM SYSTEM. A fire alarm system that is upgraded or replaced includes, but is not limited to the following:

- Replacing one single board or fire alarm control unit component with a newer model
- Installing a new fire alarm control unit in addition to or in place of an existing one
- Conversion from a horn system to an emergency voice/alarm communication system
- Conversion from a conventional system to one that utilizes addressable or analog devices

The following are not considered an upgrade or replacement:

- Firmware updates
- Software updates
- Replacing boards of the same model with chips utilizing the same or newer firmware

---

Section 307.1.1; change to read as follows:

307.1.1 Prohibited Open Burning. Open burning that is offensive or objectionable because of smoke emissions or when atmospheric conditions or local circumstances make such fires hazardous shall be prohibited.

Exception: *{No change}*

Section 307.2; change to read as follows:

307.2 Permit Required. A permit shall be obtained from the Fire Code Official in accordance with Section 105.6 prior to kindling a fire for recognized silvicultural or range or wildlife management practices, prevention or control of disease or pests, or open burning. Application for such approval shall only be presented by and permits issued to the owner of the land upon which the fire is to be kindled.

Examples of state or local law, or regulations referenced elsewhere in this section may include but not be limited to the following:

1. Texas Commission on Environmental Quality (TCEQ) guidelines and/or restrictions.
2. State, County, or Local temporary or permanent bans on open burning.

3. Local written policies as established by the Fire Code Official.

Section 307.3; change to read as follows:

307.3 Extinguishment Authority. The Fire Code Official is authorized to order the extinguishment by the permit holder, another person responsible or the fire department of open burning that creates or adds to a hazardous or objectionable situation.

Section 307.4; change to read as follows:

307.4 Location. The location for open burning shall not be less than 300 feet (91440 mm) from any structure, and provisions shall be made to prevent the fire from spreading to within 300 feet (91440 mm) of any structure.

Exceptions: *{No change}*

Section 307.4.3, Exceptions: add exception #2 to read as follows:

Exceptions:
2. Where buildings, balconies and decks are protected by an approved automatic sprinkler system.

Section 307.4.4 and 5; add section 307.4.4 and 307.4.5 to read as follows:

307.4.4 Permanent Outdoor Firepit. Permanently installed outdoor firepits for recreational fire purposes shall not be installed within 10 feet of a structure or combustible material.

Exception: Permanently installed outdoor fireplaces constructed in accordance with the International Building Code.

307.4.5 Trench Burns. Trench burns shall be conducted in air curtain trenches and in accordance with Section 307.2.

Section 307.5; change to read as follows:

307.5 Attendance. *Open burning*, trench burns, bonfires, *recreational fires*, and use of portable outdoor fireplaces shall be constantly attended until the…*{Remainder of section unchanged}*

Section 308.1.4; change to read as follows:

308.1.4 Open-flame Cooking Devices. Open-flame cooking devices, charcoal grills and other similar devices used for cooking shall not be located or used on combustible balconies, decks, or within 10 feet (3048 mm) of combustible construction.

Exceptions:

1. One- and two-family dwellings, except that LP-gas containers are limited to a water capacity not greater than 50 pounds (22.68 kg) [nominal 20 pound (9.08 kg) LP-gas capacity] with an aggregate LP-gas capacity not to exceed 100 lbs (5 containers).
2. Where buildings, balconies and decks are protected by an approved *automatic sprinkler system*, except that LP-gas containers are limited to a water capacity not greater than 50 pounds (22.68 kg) [nominal 20 pound (9.08 kg) LP-gas capacity], with an aggregate LP-gas capacity not to exceed 40 lbs (2 containers).
3. *{No change}*

Section 308.1.6.2, Exception #3; change to read as follows:

Exceptions:

1. Torches or flame-producing devices in accordance with Section 308.1.3.

Section 308.1.6.3; change to read as follows:

308.1.6.3 Sky Lanterns. A person shall not release or cause to be released an unmanned free-floating devices containing an open flame or other heat source, such as but not limited to a sky lantern.

Section 311.5; change to read as follows:

311.5 Placards. The Fire Code Official is authorized to require marking of any vacant or abandoned buildings or structures determined to be unsafe pursuant to Section 110 of this code relating to structural or interior hazards, as required by Section 311.5.1 through 311.5.5.

Section 403.5; change Section 403.5 to read as follows:

403.5 Group E Occupancies. An approved fire safety and evacuation plan in accordance with Section 404 shall be prepared and maintained for Group E occupancies and for buildings containing both a Group E occupancy and an atrium. A diagram depicting two evacuation routes shall be posted in a conspicuous location in each classroom. Group E occupancies shall also comply with Sections 403.5.1 through 403.5.3.

Section 404.2.2; add Number 4.10 to read as follows:

4.10 Fire extinguishing system controls.

Section 405.4; change Section 405.4 to read as follows:

405.4 Time. The Fire Code Official may require an evacuation drill at any time. Drills shall be held at unexpected times and under varying conditions to simulate the unusual conditions that occur in case of fire.

Section 501.4; change to read as follows:

501.4 Timing of Installation. When fire apparatus access roads or a water supply for fire protection is required to be installed for any structure or development, they shall be installed, tested, and approved prior to the time of which construction has progressed beyond completion of the foundation of any structure.

Section 503.1.1; add sentence to read as follows:

Except for one- or two-family dwellings, the path of measurement shall be along a minimum of a ten feet (10') wide unobstructed pathway around the external walls of the structure.

Section 503.2.1; change to read as follows:

503.2.1 Dimensions. Fire apparatus access roads shall have an unobstructed width of not less than 24 feet (7315 mm), exclusive of shoulders, except for approved security gates in accordance with Section 503.6, and an unobstructed vertical clearance of not less than 14 feet (4267 mm).

Exception: Vertical clearance may be reduced; provided such reduction does not impair access by fire apparatus and *approved* signs are installed and maintained indicating the established vertical clearance when approved.

Section 503.2.2; change to read as follows:

503.2.2 Authority. The Fire Code Official shall have the authority to require an increase in the minimum access widths and vertical clearances where they are inadequate for fire or rescue operations.

Section 503.2.3; change Section 503.2.3 to read as follows:

503.2.3 Surface. Fire apparatus access roads shall be designed and maintained to support imposed loads of 80,000 lbs for fire apparatus and shall be surfaced so as to provide all-weather driving capabilities.

Section 503.3; change to read as follows:

503.3 Marking. Striping, signs, or other markings, when approved by the Fire Code Official, shall be provided for fire apparatus access roads to identify such roads or prohibit the obstruction thereof. Striping, signs and other markings shall be maintained in a clean and legible condition at all times and be replaced or repaired when necessary to provide adequate visibility.

(1) Striping – Fire apparatus access roads shall be continuously marked by painted lines of red traffic paint six inches (6”) in width to show the boundaries of the lane. The words “NO PARKING FIRE LANE” or "FIRE LANE NO PARKING” shall appear in four inch (4”) white letters at 25 feet intervals on the red border markings along both sides of the fire lanes. Where a curb is available, the striping shall be on the vertical face of the curb.

(2) Signs – Signs shall read “NO PARKING FIRE LANE” or "FIRE LANE NO PARKING” and shall be 12” wide and 18” high. Signs shall be painted on a white background with letters and borders in red, using not less than 2” lettering. Signs shall be permanently affixed to a stationary post and the bottom of the sign shall be six feet, six inches (6’6”) above finished grade. Signs shall be spaced not more than fifty feet (50’) apart along both sides of the fire lane. Signs may be installed on permanent buildings or walls or as approved by the Fire Chief.

Section 503.4; change to read as follows:

503.4 Obstruction of Fire Apparatus Access Roads. Fire apparatus access roads shall not be obstructed in any manner, including the parking of vehicles. The minimum widths and clearances established in Section 503.2.1 and any area marked as a fire lane as described in Section 503.3 shall be maintained at all times.

Section 505.1; change to read as follows:

505.1 Address identification. New and existing buildings shall be provided with approved address identification. The address identification shall be legible and placed in a position that is visible from the street or road fronting the property. Address identification characters shall contrast with their background. Address numbers shall be Arabic numbers or alphabetical letters. Numbers shall not be spelled out. Each character shall be not less than 6 inches (152.4 mm) high with a minimum stroke width of 1/2 inch (12.7 mm). Where required by the Fire Code Official, address numbers shall be provided in additional approved locations to facilitate emergency response. Where access is by means of a private road, buildings do not immediately front a street, and/or the building cannot be viewed from the public way, a monument, pole or other sign with approved 6 inch (152.4 mm) height building numerals or addresses and 4 inch (101.6 mm) height suite/apartment numerals of a color contrasting with the background of the

building or other approved means shall be used to identify the structure. Numerals or addresses shall be posted on a minimum 20 inch (508 mm) by 30 inch (762 mm) background on border. Address identification shall be maintained.

> **Exception:** R-3 Single Family occupancies shall have approved numerals of a minimum 3 ½ inches (88.9 mm) in height and a color contrasting with the background clearly visible and legible from the street fronting the property and rear alleyway where such alleyway exists.

Section 507.4; change to read as follows:

507.4 Water Supply Test Date and Information. The water supply test used for hydraulic calculation of fire protection systems shall be conducted in accordance with NFPA 291 "Recommended Practice for Fire Flow Testing and Marking of Hydrants" and within one year of sprinkler plan submittal. The Fire Code Official shall be notified prior to the water supply test. Water supply tests shall be witnessed by the Fire Code Official, as required. The exact location of the static/residual hydrant and the flow hydrant shall be indicated on the design drawings. All fire protection plan submittals shall be accompanied by a hard copy of the waterflow test report, or as approved by the Fire Code Official. The report must indicate the dominant water tank level at the time of the test and the maximum and minimum operating levels of the tank, as well, or identify applicable water supply fluctuation. The licensed contractor must then design the fire protection system based on this fluctuation information, as per the applicable referenced NFPA standard. Reference Section 903.3.5 for additional design requirements.

Section 507.5.4; change to read as follows:

507.5.4 Obstruction. Unobstructed access to fire hydrants shall be maintained at all times. Posts, fences, vehicles, growth, trash, storage and other materials or objects shall not be placed or kept near fire hydrants, fire department inlet connections or fire protection system control valves in a manner that would prevent such equipment or fire hydrants from being immediately discernible. The fire department shall not be deterred or hindered from gaining immediate access to fire protection equipment or fire hydrants.

Section 509.1.2; add new Section 509.1.2 to read as follows:

509.1.2 Sign Requirements. Unless more stringent requirements apply, lettering for signs required by this section shall have a minimum height of 2 inches (50.8 mm) when located inside a building and 4 inches (101.6 mm) when located outside, or as approved by the fire code official. The letters shall be of a color that contrasts with the background.

Section 603.3.2.1, Exception; change exception to read as follows:

Exception: The aggregate capacity limit shall be permitted to be increased to 3,000 gallons (11,356 L) in accordance with all requirements of Chapter 57... *{Delete remainder of exception}*

Section 603.3.2.2; change to read as follows:

603.3.2.2 Restricted Use and Connection. Tanks installed in accordance with Section 603.3.2 shall be used only to supply fuel oil to fuel-burning equipment installed in accordance with Section 603.3.2.4. Connections between tanks and equipment supplied by such tanks shall be made using closed piping systems.

Section 604; change and add to read as follows:

604.1.1 Stationary Generators. Stationary emergency and standby power generators required by this code shall be *listed* in accordance with UL 2200.

604.1.2 Installation. Emergency power systems and standby power systems shall be installed in accordance with the *International Building Code*, NFPA 70, NFPA 110 and NFPA 111. Existing installations shall be maintained in accordance with the original approval, except as specified in Chapter 11.

604.1.3 through 604.1.8 *{No changes to these sections}*

604.1.9 Critical Operations Power Systems (COPS). For Critical Operations Power Systems necessary to maintain continuous power supply to facilities or parts of facilities that require continuous operation for the reasons of public safety, emergency management, national security, or business continuity, see NFPA 70.

604.2 Where Required. Emergency and standby power systems shall be provided where required by Sections 604.2.1 through 604.2.24 or elsewhere identified in this code or any other referenced code.

604.2.1 through 604.2.3 *{No change}*

604.2.4 Emergency Voice/Alarm Communications Systems. Emergency power shall be provided for emergency voice/alarm communications systems in the following occupancies, or as specified elsewhere in this code, as required in Section 907.5.2.2.5. The system shall be capable of powering the required load for a duration of not less than 24 hours, as required in NFPA 72.

Covered and Open Malls, Section 907.2.20 and 914.2.3
Group A Occupancies, Sections 907.2.1 and 907.5.2.2.4.
Special Amusement Buildings, Section 907.2.12.3
High-rise Buildings, Section 907.2.13
Atriums, Section 907.2.14
Deep Underground Buildings, Section 907.2.19

604.2.5 through 604.2.11 *{No change}*

604.2.12 Means of Egress Illumination. Emergency power shall be provided for *means of egress* illumination in accordance with Sections 1008.3 and 1104.5.1. (90 minutes)

604.2.13 Membrane Structures. Emergency power shall be provided for *exit* signs in temporary tents and membrane structures in accordance with Section 3103.12.6.1. (90 minutes) Standby power shall be provided for auxiliary inflation systems in permanent membrane structures in accordance with Section 2702 of the *International Building Code*. (4 hours) Auxiliary inflation systems shall be provided in temporary air-supported and air-inflated membrane structures in accordance with section 3103.10.4.

604.2.14 *{No change}*

604.2.15 Smoke Control Systems. Standby power shall be provided for smoke control systems in the following occupancies, or as specified elsewhere in this code, as required in Section 909.11:

Covered Mall Building, *International Building Code*, Section 402.7
Atriums, *International Building Code*, Section 404.7
Underground Buildings, *International Building Code*, Section 405.8
Group I-3, *International Building Code*, Section 408.4.2
Stages, *International Building Code*, Section 410.3.7.2
Special Amusement Buildings (as applicable to Group A's), *International Building Code*, Section 411.1
Smoke Protected Seating, Section 1029.6.2.1

604.2.17 Covered and Open Mall Buildings. Emergency power shall be provided in accordance with Section 907.2.20 and 914.2.3.

604.2.18 Airport Traffic Control Towers. A standby power system shall be provided in airport traffic control towers more than 65 ft. in height. Power shall be provided to the following equipment:

1. Pressurization equipment, mechanical equipment and lighting.
2. Elevator operating equipment.
3. Fire alarm and smoke detection systems.

604.2.19 Smokeproof Enclosures and Stair Pressurization Alternative. Standby power shall be provided for smokeproof enclosures, stair pressurization alternative and associated automatic fire detection systems as required by the *International Building Code*, Section 909.20.6.2.

604.2.20 Elevator Pressurization. Standby power shall be provided for elevator pressurization system as required by the *International Building Code*, Section 909.21.5.

604.2.21 Elimination of Smoke Dampers in Shaft Penetrations. Standby power shall be provided when eliminating the smoke dampers in ducts penetrating shafts in accordance with the *International Building Code*, Section 717.5.3, exception 2.3.

604.2.22 Common Exhaust Systems for Clothes Dryers. Standby power shall be provided for common exhaust systems for clothes dryers located in multistory structures in accordance with the *International Mechanical Code,* Section 504.10, Item 7.

604.2.23 Hydrogen Cutoff Rooms. Standby power shall be provided for mechanical ventilation and gas detection systems of Hydrogen Cutoff Rooms in accordance with the *International Building Code*, Section 421.8.

604.2.24 Means of Egress Illumination in Existing Buildings. Emergency power shall be provided for *means of egress* illumination in accordance with Section 1104.5 when required by the Fire Code Official. (90 minutes in I-2, 60 minutes elsewhere.)
604.3 through 604.7 *{No change}*

604.8 Energy Time Duration. Unless a time limit is specified by the fire code official, in this chapter or elsewhere in this code, or in any other referenced code or standard, the emergency and standby power system shall be supplied with enough fuel or energy storage capacity for not less than 2-hour full-demand operation of the system.

Exception: Where the system is supplied with natural gas from a utility provider and is approved.

Section 609.2; change to read as follows:

609.2 Where Required. A Type I hood shall be installed at or above all commercial cooking appliances and domestic cooking appliances used for commercial purposes that produce grease vapors, including but not limited to cooking equipment used in fixed, mobile, or temporary concessions, such as trucks, buses, trailers, pavilions, or any form of roofed enclosure, as required by the Fire Code Official.

Exceptions:

1. Tents, as provided for in Chapter 31.
2. *{No change to existing Exception}*

Additionally, fuel gas and power provided for such cooking appliances shall be interlocked with the extinguishing system, as required by Section 904.12.2. Fuel gas containers and piping/hose shall be properly maintained in good working order and in accordance with all applicable regulations.

Section 704.1; change to read as follows:

704.1 Enclosure. Interior vertical shafts including, but not limited to, *stairways*, elevator hoistways, service and utility shafts, that connect two or more stories of a building shall be enclosed or protected in accordance with the codes in effect at the time of construction but, regardless of when constructed, not less than as required in Chapter 11. New floor openings in existing buildings shall comply with the *International Building Code.*

Section 807.3; change to read as follows:

807.3 Combustible Decorative Materials. In occupancies in Groups A, E, I, and R-1, and dormitories in Group R-2, curtains, draperies, fabric hangings and other similar combustible decorative materials suspended from walls or ceilings shall comply with Section 807.4 and shall not exceed 10 percent of the specific wall or ceiling area to which they are attached.

Section 807.5.2.2 and 807.5.2.3; change to read as follows:

807.5.2.2 Artwork in Corridors. Artwork and teaching materials shall be limited on the walls of corridors to not more than 20 percent of the wall area. Such materials shall not be continuous from floor to ceiling or wall to wall. Curtains, draperies, wall hangings, and other decorative material suspended from the walls or ceilings shall meet the flame propagation performance criteria of NFPA 701 in accordance with Section 807 or be noncombustible.

> **Exception:** Corridors protected by an approved automatic sprinkler system installed in accordance with Section 903.3.1.1 shall be limited to 50 percent of the wall area.

807.5.2.3 Artwork in Classrooms. Artwork and teaching materials shall be limited on walls of classrooms to not more than 50 percent of the specific wall area to which they are attached. Curtains, draperies, wall hangings and other decorative material suspended from the walls or ceilings shall meet the flame propagation performance criteria of NFPA 701 in accordance with Section 807 or be noncombustible.

Section 807.5.5.2 and 807.5.5.3; change to read as follows:

807.5.5.2 Artwork in Corridors. Artwork and teaching materials shall be limited on the walls of corridors to not more than 20 percent of the wall area. Such materials shall not be continuous from floor to ceiling or wall to wall. Curtains, draperies, wall hangings and other decorative material suspended from the walls or ceilings shall meet the flame propagation performance criteria of NFPA 701 in accordance with Section 807 or be noncombustible.

> **Exception:** Corridors protected by an approved automatic sprinkler system installed in accordance with Section 903.3.1.1 shall be limited to 50 percent of the wall area.

807.5.5.3 Artwork in Classrooms. Artwork and teaching materials shall be limited on walls of classrooms to not more than 50 percent of the specific wall area to which they are attached. Curtains, draperies, wall hangings and other decorative material suspended from the walls or ceilings shall meet the flame propagation performance criteria of NFPA 701 in accordance with Section 807 or be noncombustible.

Section 901.6.1; add Section 901.6.1.1 to read as follows:

901.6.1.1 Standpipe Testing. Building owners/managers must maintain and test standpipe systems as per NFPA 25 requirements. The following additional requirements shall be applied to the testing that is required every 5 years:

1. The piping between the Fire Department Connection (FDC) and the standpipe shall be backflushed when foreign material is present, and also hydrostatically tested for all FDC's on any type of standpipe system. Hydrostatic testing shall also be conducted in accordance with NFPA 25 requirements for the different types of standpipe systems.
2. For any manual (dry or wet) standpipe system not having an automatic water supply capable of flowing water through the standpipe, the tester shall connect hose from a fire hydrant or portable pumping system (as approved by the Fire Code Official) to each FDC, and flow water through the standpipe system to the roof outlet to verify that each inlet connection functions properly. Confirm that there are no open hose valves prior to introducing water into a dry standpipe. There is no required pressure criteria at the outlet. Verify that check valves function properly and that there are no closed control valves on the system.
3. Any pressure relief, reducing, or control valves shall be tested in accordance with the requirements of NFPA 25. All hose valves shall be exercised.
4. If the FDC is not already provided with approved caps, the contractor shall install such caps for all FDC's as required by the Fire Code Official.
5. Upon successful completion of standpipe test, place a blue tag (as per Texas Administrative Code, Fire Sprinkler Rules for Inspection, Test and Maintenance Service (ITM) Tag) at the bottom of each standpipe riser in the building. The tag shall be check-marked as "Fifth Year" for Type of ITM, and the note on the back of the tag shall read "5 Year Standpipe Test" at a minimum.
6. The procedures required by Texas Administrative Code Fire Sprinkler Rules with regard to Yellow Tags and Red Tags or any deficiencies noted during the testing, including the required notification of the local Authority Having Jurisdiction (Fire Code Official) shall be followed.
7. Additionally, records of the testing shall be maintained by the owner and contractor, if applicable, as required by the State Rules mentioned above and NFPA 25.
8. Standpipe system tests where water will be flowed external to the building shall not be conducted during freezing conditions or during the day prior to expected night time freezing conditions.
9. Contact the Fire Code Official for requests to remove existing fire hose from Class II and III standpipe systems where employees are not trained in the utilization of this firefighting equipment. All standpipe hose valves must remain in place and be provided with an approved cap and chain when approval is given to remove hose by the Fire Code Official.

Section 901.6.3; add Section 901.6.3 to read as follows:

901.6.3 False Alarms and Nuisance Alarms. False alarms and nuisance alarms shall not be given, signaled or transmitted or caused or permitted to be given, signaled or transmitted in any manner.

Section 901.7; change to read as follows:

901.7 Systems Out of Service. Where a required *fire protection system* is out of service or in the event of an excessive number of activations, the fire department and the Fire Code Official shall be notified immediately and, where required by the Fire Code Official, the building shall either be evacuated or an *approved fire watch* shall be provided for all occupants left unprotected by the shut down until the *fire protection system* has been returned to service*…{remaining text unchanged}*

Section 901.8.2; change to read as follows:

901.8.2 Removal of Occupant-use Hose Lines. The Fire Code Official is authorized to permit the removal of occupant-use hose lines and hose valves where all of the following conditions exist:

~~1~~. *{Delete}*
~~2~~. 1. The hose line(s) would not be utilized by trained personnel or the fire department.
~~3~~. 2. If the occupant-use hose lines are removed, but the hose valves are required to remain as per the fire code official, such shall be compatible with local fire department fittings.

Section 903.1.1; change to read as follows:

903.1.1 Alternative Protection. Alternative automatic fire-extinguishing systems complying with Section 904 shall be permitted in addition to automatic sprinkler protection where recognized by the applicable standard, or as *approved* by the Fire Code Official.

Section 903.2; add paragraph to read as follows:

Automatic Sprinklers shall not be installed in elevator machine rooms, elevator machine spaces, and elevator hoistways, other than pits where such sprinklers would not necessitate shunt trip requirements under any circumstances. Storage shall not be allowed within the elevator machine room. Signage shall be provided at the entry doors to the elevator machine room indicating "ELEVATOR MACHINERY – NO STORAGE ALLOWED."

Section 903.2; delete the exception.

Section 903.2.9; add Section 903.2.9.3 to read as follows:

903.2.9.3 Self-Service Storage Facility. An automatic sprinkler system shall be installed throughout all self-service storage facilities.

Section 903.2.11; change 903.2.11.3 and add 903.2.11.7, 903.2.11.8, and 903.2.11.9 as follows:

903.2.11.3 Buildings 35 feet or more in height. An automatic sprinkler system shall be installed throughout buildings that have one or more stories, other than penthouses in compliance with Section 1510 of the *International Building Code*, located 35 feet (10668 mm) or more above the lowest level of fire department vehicle access, measured to the finished floor.

Exception:

1. Open parking structures in compliance with Section 406.5 of the *International Building Code, having no other occupancies above the subject garage*.

~~2.~~ *{Delete}*

903.2.11.7 High-Piled Combustible Storage. For any building with a clear height exceeding 12 feet (4572 mm), see Chapter 32 to determine if those provisions apply.

903.2.11.8 Spray Booths and Rooms. New and existing spray booths and spraying rooms shall be protected by an approved automatic fire-extinguishing system.

903.2.11.9 Buildings Over 6,000 sq. ft. An automatic sprinkler system shall be installed throughout all buildings with a building area 6,000 sq. ft. or greater and in all existing buildings that are enlarged to be 6,000 sq. ft. or greater. For the purpose of this provision, fire walls shall not define separate buildings.

Exception: Open parking garages in compliance with Section 406.5 of the *International Building Code*.

Section 903.3.1.1.1; change to read as follows:

903.3.1.1.1 Exempt Locations. When approved by the Fire Code Official, automatic sprinklers shall not be required in the following rooms or areas where such*...{text unchanged}…*because it is damp, of fire-resistance-rated construction or contains electrical equipment.

1. Any room where the application of water, or flame and water, constitutes a serious life or fire hazard.
2. Any room or space where sprinklers are considered undesirable because of the nature of the contents, when approved by the Code Official.
3. Generator and transformer rooms, under the direct control of a public utility, separated from the remainder of the building by walls and floor/ceiling or roof/ceiling assemblies having a fire-resistance rating of not less than 2 hours.

~~4.~~ *{Delete}*

~~5.~~ 4. Elevator machine rooms, machinery spaces, and hoistways, other than pits where such sprinklers would not necessitate shunt trip requirements under any circumstances.

~~6.~~ *{Delete}*

Section 903.3.1.2.3; add section to read as follows:

[F] Section 903.3.1.2.3 Attics and Attached Garages. Sprinkler protection is required in attic spaces of such buildings two or more stories in height, in accordance with NFPA 13 and or NFPA 13R requirements, and attached garages.

Section 903.3.1.3; change to read as follows:

903.3.1.3 NFPA 13D Sprinkler Systems. *Automatic sprinkler systems* installed in one- and two-family *dwellings*; Group R-3; Group R-4 Condition 1 and *townhouses* shall be permitted to be installed throughout in accordance with NFPA 13D or in accordance with state law.

Section 903.3.1.4; add to read as follows:

[F] 903.3.1.4 Freeze protection. Freeze protection systems for automatic fire sprinkler systems shall be in accordance with the requirements of the applicable referenced NFPA standard and this section.

903.3.1.4.1 Attics. Only dry-pipe, preaction, or listed antifreeze automatic fire sprinkler systems shall be allowed to protect attic spaces.

Exception: Wet-pipe fire sprinkler systems shall be allowed to protect non-ventilated attic spaces where:

1. The attic sprinklers are supplied by a separate floor control valve assembly to allow ease of draining the attic system without impairing sprinklers throughout the rest of the building, and
2. Adequate heat shall be provided for freeze protection as per the applicable referenced NFPA standard, and
3. The attic space is a part of the building's thermal, or heat, envelope, such that insulation is provided at the roof deck, rather than at the ceiling level.

903.3.1.4.2 Heat trace/insulation. Heat trace/insulation shall only be allowed where approved by the Fire Code Official for small sections of large diameter water-filled pipe.

Section 903.3.5; add a second paragraph to read as follows:

[F] Water supply as required for such systems shall be provided in conformance with the supply requirements of the respective standards; however, every water-based fire protection system shall be designed with a 10 psi safety factor. Reference Section 507.4 for additional design requirements.

Section 903.4; add a second paragraph after the exceptions to read as follows:

Sprinkler and standpipe system water-flow detectors shall be provided for each floor tap to the sprinkler system and shall cause an alarm upon detection of water flow for more than 45 seconds. All control valves in the sprinkler and standpipe systems except for fire department hose connection valves shall be electrically supervised to initiate a supervisory signal at the central station upon tampering.

Section 903.4.2; add second paragraph to read as follows:

The alarm device required on the exterior of the building shall be a weatherproof horn/strobe notification appliance with a minimum 75 candela strobe rating, installed as close as practicable to the fire department connection.

Section 905.2; change to read as follows:

905.2 Installation Standard. Standpipe systems shall be installed in accordance with this section and NFPA 14. Manual dry standpipe systems shall be supervised with a minimum of 10 psig and a maximum of 40 psig air pressure with a high/low alarm.

Section 905.3; add Section 905.3.9 and exception to read as follows:

905.3.9 Buildings Exceeding 10,000 sq. ft. In buildings exceeding 10,000 square feet in area per story and where any portion of the building's interior area is more than 200 feet (60960 mm) of travel, vertically and horizontally, from the nearest point of fire department vehicle access, Class I automatic wet or manual wet standpipes shall be provided.

Exceptions:

1. Automatic dry and semi-automatic dry standpipes are allowed as provided for in NFPA 14.
2. R-2 occupancies of four stories or less in height having no interior corridors.

Section 905.4, change Item 1, 3, and 5, and add Item 7 to read as follows:

1. In every required exit stairway, a hose connection shall be provided for each story above and below grade plane. Hose connections shall be located at an intermediate landing between stories, unless otherwise approved by the Fire Code Official.
2. *{No change}*
3. In every exit passageway, at the entrance from the exit passageway to other areas of a building.
   Exception: Where floor areas adjacent to an exit passageway are reachable from an exit stairway hose connection by a…*{No change to rest}*
4. *{No change}*
5. Where the roof has a slope less than four units vertical in 12 units horizontal (33.3-percent slope), each standpipe shall be provided with a two-way hose connection located to serve the roof or at the highest landing of an exit stairway with stair access to the roof provided in accordance with Section 1011.12.

6. *{No change}*
7. When required by this Chapter, standpipe connections shall be placed adjacent to all required exits to the structure and at two hundred feet (200') intervals along major corridors thereafter, or as otherwise approved by the Fire Code Official.

Section 905.9; add a second paragraph after the exceptions to read as follows:

Sprinkler and standpipe system water-flow detectors shall be provided for each floor tap to the sprinkler system and shall cause an alarm upon detection of water flow for more than 45 seconds. All control valves in the sprinkler and standpipe systems except for fire department hose connection valves shall be electrically supervised to initiate a supervisory signal at the central station upon tampering.

Section 907.1; add Section 907.1.4 and 907.1.4.1 to read as follows:

907.1.4 Design Standards. Where a new fire alarm system is installed, the devices shall be addressable. Fire alarm systems utilizing more than 20 smoke detectors shall have analog initiating devices.

Section 907.2.1; change to read as follows:

907.2.1 Group A. A manual fire alarm system that activates the occupant notification system in accordance with Section 907.5 shall be installed in Group A occupancies having an occupant load of 300 or more persons or more than 100 persons above or below the lowest level of exit discharge. Group A occupancies not separated from one another in accordance with Section 707.3.10 of the *International Building Code* shall be considered as a single occupancy for the purposes of applying this section. Portions of Group E occupancies occupied for assembly purposes shall be provided with a fire alarm system as required for the Group E occupancy.

Exception: *{No change}*

Activation of fire alarm notification appliances shall:

1. Cause illumination of the *means of egress* with light of not less than 1 foot-candle (11 lux) at the walking surface level, and
2. Stop any conflicting or confusing sounds and visual distractions.

Section 907.2.3; change to read as follows:

907.2.3 Group E. A manual fire alarm system that initiates the occupant notification signal utilizing an emergency voice/alarm communication system meeting the requirements of Section 907.5.2.2 and installed in accordance with Section 907.6 shall be installed in Group E educational occupancies. When *automatic sprinkler systems* or smoke detectors are installed, such systems or detectors shall be connected to the building fire alarm system. An approved smoke detection system shall be installed in Group E day care occupancies. Unless separated by a minimum of 100' open space, all buildings, whether portable buildings or the main building, will be considered one building for alarm occupant load consideration and interconnection of alarm systems.

Exceptions:

1. *{No change}*
   1.1. Residential In-Home day care with not more than 12 children may use interconnected single station detectors in all habitable rooms. (For care of more than five children 2 1/2 or less years of age, see Section 907.2.6.) *{No change to remainder of exceptions}*

Section 907.2.13, Exception 3; change to read as follows:

3. Open air portions of buildings with an occupancy in Group A-5 in accordance with Section 303.1 of the *International Building Code*; however, this exception does not apply to accessory uses including but not limited to sky boxes, restaurants, and similarly enclosed areas.

Section 907.4.2; add Section 907.4.2.7 to read as follows:

907.4.2.7 Type. Manual alarm initiating devices shall be an approved double action type.

Section 907.6.1; add Section 907.6.1.1 to read as follows:

907.6.1.1 Wiring Installation. All fire alarm systems shall be installed in such a manner that a failure of any single initiating device or single open in an initiating circuit conductor will not interfere with the normal operation of other such devices. All signaling line circuits (SLC) shall be installed in such a way that a single open will not interfere with the operation of any addressable devices (Class A). Outgoing and return SLC conductors shall be installed in accordance with NFPA 72 requirements for Class A circuits and shall have a minimum of four feet separation horizontal and one foot vertical between supply and return circuit conductors. The initiating device circuit (IDC) from a signaling line circuit interface device may be wired Class B, provided the distance from the interface device to the initiating device is ten feet or less.

Section 907.6.3; delete all four Exceptions.

Section 907.6.6; – add sentence at end of paragraph to read as follows:

[F] See 907.6.3 for the required information transmitted to the supervising station.

Section 909.22; add to read as follows:

909.22 Stairway or Ramp Pressurization Alternative. Where the building is equipped throughout with an automatic sprinkler system in accordance with Section 903.3.1.1 and the stair pressurization alternative is chosen for compliance with Building Code requirements for a smokeproof enclosure, interior exit stairways or ramps shall be pressurized to a minimum of 0.10 inches of water (25 Pa) and a maximum of 0.35 inches of water (87 Pa) in the shaft relative to the building measured with all interior exit stairway and ramp doors closed under maximum anticipated conditions of stack effect and wind effect. Such systems shall comply with Section 909, including the installation of a separate fire-fighter's smoke control panel as per Section 909.16, and a Smoke Control Permit shall be required from the fire department as per Section 105.7.

[F] 909.22.1 Ventilating equipment. The activation of ventilating equipment for the stair or ramp pressurization system shall be by smoke detectors installed at each floor level at an approved location at the entrance to the smokeproof enclosure. When the closing device for the stairway or ramp shaft and vestibule doors is activated by smoke detection or power failure, the mechanical equipment shall activate and operate at the required performance levels. Smoke detectors shall be installed in accordance with Section 907.3.

909.22.1.1 Ventilation Systems. Smokeproof enclosure ventilation systems shall be independent of other building ventilation systems. The equipment, control wiring, power wiring and ductwork shall comply with one of the following:

1. Equipment, control wiring, power wiring and ductwork shall be located exterior to the building and directly connected to the smokeproof enclosure or connected to the smokeproof enclosure by ductwork enclosed by not less than 2-hour fire barriers constructed in

accordance with Section 707 of the Building Code or horizontal assemblies constructed in accordance with Section 711 of the Building Code, or both.

2. Equipment, control wiring, power wiring and ductwork shall be located within the smokeproof enclosure with intake or exhaust directly from and to the outside or through ductwork enclosed by not less than 2-hour barriers constructed in accordance with Section 707 of the Building Code or horizontal assemblies constructed in accordance with Section 711 of the Building Code, or both.
3. Equipment, control wiring, power wiring and ductwork shall be located within the building if separated from the remainder of the building, including other mechanical equipment, by not less than 2-hour fire barriers constructed in accordance with Section 707 of the Building Code or horizontal assemblies constructed in accordance with Section 711 of the Building Code, or both.

Exceptions:

1. Control wiring and power wiring utilizing a 2-hour rated cable or cable system.
2. Where encased with not less than 2 inches (51 mm) of concrete.
3. Control wiring and power wiring protected by a listed electrical circuit protective systems with a fire-resistance rating of not less than 2 hours.

909.21.1.2 Standby Power. Mechanical vestibule and stairway and ramp shaft ventilation systems and automatic fire detection systems shall be provided with standby power in accordance with Section 2702 of the Building Code.

909.22.1.3 Acceptance and Testing. Before the mechanical equipment is approved, the system shall be tested in the presence of the Fire Code Official to confirm that the system is operating in compliance with these requirements.

Section 910.2; change Exception 2 and 3 to read as follows:

[F] 2. Only manual smoke and heat removal shall be required in areas of buildings equipped with early suppression fast-response (ESFR) sprinklers. Automatic smoke and heat removal is prohibited.

3. Only manual smoke and heat removal shall be required in areas of buildings equipped with control mode special application sprinklers with a response time index of $50(m*S)^{1/2}$ or less that are listed to control a fire in stored commodities with 12 or fewer sprinklers. Automatic smoke and heat removal is prohibited.

Section 910.2; add subsections 910.2.3 with exceptions to read as follows:

910.2.3 Group H. Buildings and portions thereof used as a Group H occupancy as follows:

1. In occupancies classified as Group H-2 or H-3, any of which are more than 15,000 square feet (1394 m^2) in single floor area.
   Exception: Buildings of noncombustible construction containing only noncombustible materials.
2. In areas of buildings in Group H used for storing Class 2, 3, and 4 liquid and solid oxidizers, Class 1 and unclassified detonable organic peroxides, Class 3 and 4 unstable (reactive) materials, or Class 2 or 3 water-reactive materials as required for a high-hazard commodity classification.
   Exception: Buildings of noncombustible construction containing only noncombustible materials.

Section 910.3; add section 910.3.4 to read as follows:

910.3.4 Vent Operation. Smoke and heat vents shall be capable of being operated by approved automatic and manual means. Automatic operation of smoke and heat vents shall conform to the provisions of Sections 910.3.2.1 through 910.3.2.3.

[F] 910.3.4.1 Sprinklered buildings. Where installed in buildings equipped with an approved automatic sprinkler system, smoke and heat vents shall be designed to operate automatically. The automatic operating mechanism of the smoke and heat vents shall operate at a temperature rating at least 100 degrees F (approximately 38 degrees Celsius) greater than the temperature rating of the sprinklers installed.

Exception: Manual only systems per Section 910.2.

910.3.4.2 Nonsprinklered Buildings. Where installed in buildings not equipped with an approved automatic sprinkler system, smoke and heat vents shall operate automatically by actuation of a heat-responsive device rated at between 100°F (56°C) and 220°F (122°C) above ambient.

Exception: Listed gravity-operated drop out vents.

Section 910.4.3.1; change to read as follows:

910.4.3.1 Makeup Air. Makeup air openings shall be provided within 6 feet (1829 mm) of the floor level. Operation of makeup air openings shall be automatic. The minimum gross area of makeup air inlets shall be 8 square feet per 1,000 cubic feet per minute (0.74 m2 per 0.4719 m3/s) of smoke exhaust.

Section 910.4.4; change to read as follows:

910.4.4 Activation. The mechanical smoke removal system shall be activated automatically by the automatic sprinkler system or by an approved fire detection system. Individual manual controls shall also be provided.

Exception: Manual only systems per Section 910.2.

Section 912.2; add Section 912.2.3 to read as follows:

912.2.3 Hydrant Distance. An approved fire hydrant shall be located within 100 feet of the fire department connection as the fire hose lays along an unobstructed path.

Section 913.2.1; add second paragraph and exception to read as follows:

When located on the ground level at an exterior wall, the fire pump room shall be provided with an exterior fire department access door that is not less than 3 ft. in width and 6 ft. – 8 in. in height, regardless of any interior doors that are provided. A key box shall be provided at this door, as required by Section 506.1.

Exception: When it is necessary to locate the fire pump room on other levels or not at an exterior wall, the corridor leading to the fire pump room access from the exterior of the building shall be provided with equivalent fire resistance as that required for the pump room, or as approved by the Fire Code Official. Access keys shall be provided in the key box as required by Section 506.1.

Section 914.3.1.2; change to read as follows:

914.3.1.2 Water Supply to required Fire Pumps. In buildings that are more than 120 feet (128 m) in *building height*, required fire pumps shall be supplied by connections to no fewer than two water mains located in different streets. Separate supply piping shall be provided between each connection to the water main and the pumps. Each connection and the supply piping between the connection and the pumps shall be sized to supply the flow and pressure required for the pumps to operate.

Exception: *{No change to exception}*

Section 1006.2.2.6; add a new Section 1006.2.2.6 as follows:

1006.2.2.6 Electrical Rooms. For electrical rooms, special exiting requirements may apply. Reference the Electrical Code as adopted.

Section 1009.1; add the following Exception 4:

Exceptions:

{previous exceptions unchanged}

4. Buildings regulated under State Law and built in accordance with State registered plans, including any variances or waivers granted by the State, shall be deemed to be in compliance with the requirements of Section 1009.

Section 1010.1.9.4 Bolt Locks; change Exceptions 3 and 4 to read as follows:

Exceptions:

3. Where a pair of doors serves an *occupant load* of less than 50 persons in a Group B, F, M or S occupancy. {*remainder unchanged*}
4. Where a pair of doors serves a Group A, B, F, M or S occupancy {*remainder unchanged*}

Section 1015.8 Window Openings; change number 1 to read as follows:

1. Operable windows where the top of the sill of the opening is located more than 55 (16,764 mm) above the finished grade or other surface below and that are provided with window fall prevention devices that comply with ASTM F 2006.

Section 1020.1 Construction; add Exception 6 to read as follows:

6. In group B occupancies, corridor walls and ceilings need not be of fire-resistive construction within a single tenant space when the space is equipped with approved automatic smoke-detection within the corridor. The actuation of any detector shall activate self-annunciating alarms audible in all areas within the corridor. Smoke detectors shall be connected to an approved automatic fire alarm system where such system is provided.

Section 1029.1.1.1; delete this section. Spaces under Grandstands and Bleachers:

Section 1031.2; change to read as follows:

1031.2 Reliability. Required *exit accesses, exits* and *exit discharges* shall be continuously maintained free from obstructions or impediments to full instant use in the case of fire or other emergency. An *exit* or *exit passageway* shall not be used for any purpose that interferes with a means of egress.

Section 1103.3; add sentence to end of paragraph as follows:

Provide emergency signage as required by Section 607.3.

Section 1103.5; add Section 1103.5.1 to read as follows:

1103.5.1 Group A-2. Spray Booths and Rooms. Existing spray booths and spray rooms shall be protected by an approved automatic fire-extinguishing system in accordance with Section 2404.

Section 1103.7; add Section 1103.7.8 and 1103.7.8.1 to read as follows:

1103.7.8 Fire Alarm System Design Standards. Where an existing fire alarm system is upgraded or replaced, the devices shall be addressable. Fire alarm systems utilizing more than 20 smoke and/or heat detectors shall have analog initiating devices.

Exception: Existing systems need not comply unless the total building, or fire alarm system, remodel or expansion exceeds 30% of the building. When cumulative building, or fire alarm system, remodel or expansion initiated after the date of original fire alarm panel installation exceeds 50% of the building, or fire alarm system, the fire alarm system must comply within 18 months of permit application.

1103.7.8.1 Communication requirements. Refer to Section 907.6.6 for applicable requirements.

Section 2304.1; change to read as follows:

2304.1 Supervision of Dispensing. The dispensing of fuel at motor fuel-dispensing facilities shall be in accordance with the following:

1. Conducted by a qualified attendant; and/or,
2. Shall be under the supervision of a qualified attendant; and/or
3. Shall be an unattended self-service facility in accordance with Section 2304.3.

At any time the qualified attendant of item Number 1 or 2 above is not present, such operations shall be considered as an unattended self-service facility and shall also comply with Section 2304.3.

Section 2401.2; delete this section.

Table 3206.2, footnote j; change text to read as follows:

j. Where storage areas are protected by either early suppression fast response (ESFR) sprinkler systems or control mode special application sprinklers with a response time index of 50 (m • s) 1/2 or less that are listed to control a fire in the stored commodities with 12 or fewer sprinklers, installed in accordance with NFPA 13, manual smoke and heat vents or manually activated engineered mechanical smoke exhaust systems shall be required within these areas.

Section 3310.1; add sentence to end of paragraph to read as follows:

When fire apparatus access roads are required to be installed for any structure or development, they shall be approved prior to the time at which construction has progressed beyond completion of the foundation of any structure.

Section 5601.1.3; change to read as follows:

5601.1.3 Fireworks. The possession, manufacture, storage, sale, handling, and use of fireworks are prohibited.

Exceptions:

1. Only when approved for fireworks displays, storage, and handling of fireworks as allowed in Section 5604 and 5608.

~~2.~~ *{Delete}*

~~3.~~2. The use of fireworks for approved fireworks displays as allowed in Section 5608.

~~4.~~ *{Delete}*

Section 5703.6; add a sentence to read as follows:

5703.6 Piping Systems. Piping systems, and their component parts, for flammable and combustible liquids shall be in accordance with Sections 5703.6.1 through 5703.6.11. An *approved* method of secondary containment shall be provided for underground tank and piping systems.

Section 5704.2.9.5; change Section 5704.2.9.5 and add Section 5704.2.9.5.3 to read as follows:

5704.2.9.5 Above-ground Tanks Inside of Buildings. Above-ground tanks inside of buildings shall comply with Section 5704.2.9.5.1 through 5704.2.9.5.3.

5704.2.9.5.1 *{No change}*

5704.2.9.5.2 *{No change}*

5704.2.9.5.3 Combustible Liquid Storage Tanks Inside of Buildings. The maximum aggregate allowable quantity limit shall be 3,000 gallons (11 356 L) of Class II or III combustible liquid for storage in protected aboveground tanks complying with Section 5704.2.9.7 when all of the following conditions are met:

1. The entire 3,000 gallon (11 356 L) quantity shall be stored in protected above-ground tanks;
2. The 3,000 gallon (11 356 L) capacity shall be permitted to be stored in a single tank or multiple smaller tanks;
3. The tanks shall be located in a room protected by an *automatic sprinkler system* complying with Section 903.3.1.1; and
4. Tanks shall be connected to fuel-burning equipment, including generators, utilizing an *approved* closed piping system.

The quantity of combustible liquid stored in tanks complying with this section shall not be counted towards the maximum allowable quantity set forth in Table 5003.1.1(1), and such tanks shall not be required to be located in a control area. Such tanks shall not be located more than two stories below grade.

Section 5704.2.11.4; add a sentence to read as follows:

5704.2.11.4 Leak Prevention. Leak prevention for underground tanks shall comply with Sections 5704.2.11.4.1 through 5704.2.11.4.3. An *approved* method of secondary containment shall be provided for underground tank and piping systems.

Section 5704.2.11.4.2; change to read as follows:

5704.2.11.4.2 Leak Detection. Underground storage tank systems shall be provided with an *approved* method of leak detection from any component of the system that is designed and installed in accordance with NFPA 30 and as specified in Section 5704.2.11.4.3.

Section 5704.2.11.4; add Section 5704.2.11.4.3 to read as follows:

5704.2.11.4.3 Observation Wells. Approved sampling tubes of a minimum 4 inches in diameter shall be installed in the backfill material of each underground flammable or combustible liquid storage tank. The tubes shall extend from a point 12 inches below the average grade of the excavation to ground level and shall be provided with suitable surface access caps. Each tank site shall provide a sampling tube at the corners of the excavation with a minimum of 4 tubes. Sampling tubes shall be placed in the product line excavation within 10 feet of the tank excavation and one every 50 feet routed along product lines towards the dispensers, a minimum of two are required.

Section 6103.2.1; add Section 6103.2.1.8 to read as follows:

6103.2.1.8 Jewelry Repair, Dental Labs and Similar Occupancies. Where natural gas service is not available, portable LP-Gas containers are allowed to be used to supply approved torch assemblies or similar appliances. Such containers shall not exceed 20-pound (9.0 kg) water capacity. Aggregate capacity shall not exceed 60-pound (27.2 kg) water capacity. Each device shall be separated from other containers by a distance of not less than 20 feet.

Section 6104.2, Exception; add an exception 2 to read as follows:

Exceptions:

1. *{existing text unchanged}*
2. Except as permitted in Sections 308 and 6104.3.2, LP-gas containers are not permitted in residential areas.

Section 6104.3; add Section 6104.3.2 to read as follows:

6104.3.2 Spas, Pool Heaters, and Other Listed Devices. Where natural gas service is not available, an LP-gas container is allowed to be used to supply spa and pool heaters or other listed devices. Such container shall not exceed 250-gallon water capacity per lot. See Table 6104.3 for location of containers.

Exception: Lots where LP-gas can be off-loaded wholly on the property where the tank is located may install up to 500 gallon above ground or 1,000 gallon underground approved containers.

Section 6107.4 and 6109.13; change to read as follows:

6107.4 Protecting Containers from Vehicles. Where exposed to vehicular damage due to proximity to alleys, driveways or parking areas, LP-gas containers, regulators and piping shall be protected in accordance with Section 312.

6109.13 Protection of Containers. LP-gas containers shall be stored within a suitable enclosure or otherwise protected against tampering. Vehicle impact protection shall be provided as required by Section 6107.4.

Table B105.2; change footnote a. to read as follows:

a. The reduced fire-flow shall be not less than 1,000 1,500 gallons per minute.

END

Exhibit G

Recommended Amendments to the 2015 International Mechanical Code

North Central Texas Council of Governments Region

The following sections, paragraphs, and sentences of the *2015 International Mechanical Code* (IMC) are hereby amended as follows:

Section 102.8; change to read as follows:

102.8 Referenced Codes and Standards. The codes and standards referenced herein shall be those that are listed in Chapter 15 and such codes, when specifically adopted, and standards shall be considered part of the requirements of this code to the prescribed extent of each such reference. Where differences occur between provisions of this code and the referenced standards, the provisions of this code shall apply. Whenever amendments have been adopted to the referenced codes and standards, each reference to said code and standard shall be considered to reference the adopted amendments. Any reference to NFPA 70 or the *National Electrical Code* (NEC) shall mean the Electrical Code as adopted.

Section 306.3; change to read as follows:

306.3 Appliances in Attics. Attics containing appliances shall be provided…*{bulk of paragraph unchanged}…*side of the appliance. The clear *access* opening dimensions shall be a minimum of 20 inches by 30 inches (508 mm by 762 mm), or larger where such dimensions are not large enough to allow removal of the largest appliance. A walkway to an appliance shall be rated as a floor as approved by the Building Official. As a minimum, for *access* to the attic space, provide one of the following:

1. A permanent stair.
2. A pull down stair with a minimum 300 lb. (136 kg) capacity.
3. An *access* door from an upper floor level.
4. *Access* Panel may be used in lieu of items 1, 2, and 3 with prior approval of the code official due to building conditions.

Exceptions:

1. The passageway and level service space are not required where the appliance is capable of being serviced and removed…*{remainder of section unchanged}*

Section 306.5; change to read as follows:

306.5 Equipment and Appliances on Roofs or Elevated Structures. Where *equipment* requiring *access* or appliances are located on an elevated structure or the roof of a building such that personnel will have to climb higher than 16 feet (4877 mm) above grade to access, a permanent interior or exterior means of access shall be provided. Permanent exterior ladders providing roof *access* need not extend closer than 12 feet (2438 mm) to the finish grade or floor level below and shall extend to the *equipment* and appliances' level service space. Such *access* shall…*{bulk of section to read the same}*…on roofs having a slope greater than 4 units vertical in 12 units horizontal (33 percent slope)…*{bulk of section to read the same}*.

Section 306.5.1; change to read as follows:

306.5.1 Sloped Roofs. Where appliances, *equipment*, fans or other components that require service are installed on a roof having a slope of 3 units vertical in 12 units horizontal (25-percent slope) or greater and having an edge more than 30 inches (762 mm) above grade at such edge, a catwalk at least 16 inches in width with substantial cleats spaced not more than 16 inches apart shall be provided from the roof *access* to a level platform at the appliance. The level platform shall be provided on each side of the appliance to which *access* is required for service, repair or maintenance. The platform shall be not less than 30 inches (762 mm) in any dimension and shall be provided with guards. The guards shall extend not less than 42 inches (1067 mm) above the platform, shall be constructed so as to prevent the passage of a 21-inch-diameter (533 mm) sphere and shall comply with the loading requirements for guards specified in the *International Building Code*.

Section 306; add Section 306.6 to read as follows:

306.6 Water Heaters Above Ground or Floor. When the mezzanine or platform in which a water heater is installed is more than eight (8) feet (2438 mm) above the ground or floor level, it shall be made accessible by a stairway or permanent ladder fastened to the building.

> **Exception:** A maximum 10 gallon water heater (or larger with approval) is capable of being accessed through a lay-in ceiling and the water heater installed is not more than ten (10) feet (3048 mm) above the ground or floor level and may be reached with a portable ladder.

Section 307.2.3; amend item 2 to read as follows:

2. A separate overflow drain line shall be connected to the drain pan provided with the equipment. Such overflow drain shall discharge to a conspicuous point of disposal to alert occupants in the event of a stoppage of the primary drain. The overflow drain line shall connect to the drain pan at a higher level than the primary drain connection. However, the conspicuous point shall not create a hazard such as dripping over a walking surface or other areas so as to create a nuisance.

Section 403.2.1; add an item 5 to read as follows:

5. Toilet rooms within private dwellings that contain only a water closet, lavatory, or combination thereof may be ventilated with an *approved* mechanical recirculating fan or similar device designed to remove odors from the air.

Section 501.3; add an exception to read as follows:

501.3 Exhaust Discharge. The air removed by every mechanical exhaust system shall be discharged outdoors at a point where it will not cause a public nuisance and not less than the distances specified in Section 501.3.1. The air shall be discharged to a location from which it cannot again be readily drawn in by a ventilating system. Air shall not be exhausted into an attic, crawl space, or be directed onto walkways.

> **Exceptions:**
>
> 1. Whole-house ventilation-type attic fans shall be permitted to discharge into the attic space of dwelling units having private attics.
> 2. Commercial cooking recirculating systems.
> 3. Where installed in accordance with the manufacturer's instructions and where mechanical or natural ventilation is otherwise provided in accordance with Chapter 4, listed and labeled domestic ductless range hoods shall not be required to discharge to the outdoors.
> 4. Toilet room exhaust ducts may terminate in a warehouse or shop area when infiltration of outside air is present.

Section 607.5.1; change to read as follows:

607.5.1 Fire Walls. Ducts and air transfer openings permitted in fire walls in accordance with Section 705.11 of the International Building Code shall be protected with listed fire dampers installed in accordance with their listing**.** For hazardous exhaust systems see Section 510.1-510.9 IMC.

END

City of Benbrook

CITY COUNCIL COMMUNICATION

DATE:	REFERENCE NUMBER:	SUBJECT:	PAGE:
08/04/16	G-2257	Adopt Ordinance amending Chapter 10.24 of the Benbrook Municipal Code by revising speed limits on RM 2871, Jerry Dunn Parkway and Whitestone Ranch Road	1 of 2

BACKGROUND

RM 2871

On February 16, 2016, the City of Benbrook made a request to Texas Department of Transportation (TXDOT) to reduce the speed limit on RM 2871 between Hwy 377 and the city limits. The request is due to the new elementary school currently under construction at RM 2871 and Jerry Dunn Pkwy and further developments in Benbrook and Fort Worth that will affect the traffic on RM 2871.

For the new elementary school, neither the City nor TXDOT is recommending a school zone to be placed on RM 2871 at Jerry Dunn Pkwy because there is a traffic signal at the cross walk which will allow children to cross RM 2871. However, the City is requesting the speed limit to be reduced in the area to slow traffic down on RM 2871 near the school. Developments are under construction in Benbrook and Fort Worth that will increase the traffic on RM 2871 so a reduced speed limit is in order.

On April 1, 2016, TXDOT performed a speed zone study along RM 2871 and results indicated the following speed limit reductions:

- Hwy 377 to Locksley Drive from 55 mph to 40 mph
- Locksley Drive to City Limits from 55 mph to 45 mph

JERRY DUNN PARKWAY

The Fort Worth Independent School District has requested a school zone along Jerry Dunn Parkway in front of the new elementary school and conducted an engineering study to support the request. A copy of the proposed signing plan is attached.

RECOMMENDATION

Staff recommends that City Council adopt the attached ordinance amending Chapter 10.24 of the Benbrook Municipal Code by revising the speed limits on RM 2871, Jerry Dunn Parkway and Whitestone Ranch Road.

SUBMITTED BY:	DISPOSITION BY COUNCIL: ☐ APPROVED ☐ OTHER (DESCRIBE)	PROCESSED BY: CITY SECRETARY
CITY MANAGER		DATE:

DATE:	REFERENCE NUMBER:	SUBJECT:	PAGE:
08/04/16	G-2257	Adopt Ordinance amending Chapter 10.24 of the Benbrook Municipal Code by revising speed limits on RM 2871, Jerry Dunn Parkway and Whitestone Ranch Road	2 of 2

ORDINANCE NO. 1397

AN ORDINANCE AMENDING CHAPTER 10.24 OF THE BENBROOK MUNICIPAL CODE (1985), AS AMENDED, BY REVISING THE REFERENCES TO SPEED LIMITS ON RANCH-TO-MARKET ROAD 2871 BETWEEN CITY LIMIT LINE (MILEPOST 14.325) AND BENBROOK BOULEVARD (U.S. 377 MILEPOST 15.322) AND ON PORTIONS OF JERRY DUNN PARKWAY AND WHITESTONE RANCH ROAD; PROVIDING FOR A PENALTY FOR VIOLATIONS; PROVIDING THAT THIS ORDINANCE SHALL BE CUMULATIVE OF ALL ORDINANCES; PROVIDING A SEVERABILITY CLAUSE; PROVIDING A SAVINGS CLAUSE; PROVIDING FOR PUBLICATION IN PAMPHLET FORM; PROVIDING FOR ENGROSSMENT AND ENROLLMENT; PROVIDING FOR PUBLICATION IN THE OFFICIAL NEWSPAPER; AND PROVIDING AN EFFECTIVE DATE.

WHEREAS, the City of Benbrook is a home rule city acting under its charter adopted by the electorate pursuant to Article XI, Section 5 of the Texas Constitution and Chapter 9 of the Local Government Code; and

WHEREAS, the Texas Transportation Code, Chapter 545 Paragraph 545.356, provides that whenever the governing body of the City shall determine upon the basis of an engineering and traffic investigation that any prima facie speed therein set forth is greater or less than is reasonable or safe under the conditions found to exist at any intersection or other place or upon any part of a street or highway, with the City taking into consideration the width and condition of the pavement and other circumstances on such portion of said street or highway, as well as the usual traffic thereon, said governing body may determine and declare a reasonable and safe prima facie speed limit thereat or thereon by passage of an ordinance, which shall be effective when appropriate signs giving notice thereof are erected as such intersection or other place or part of the street or highway, and

WHEREAS, the Texas Department of Transportation has conducted an engineering and traffic investigation heretofore made as authorized by the provisions of the Texas Transportation Code, Chapter 545, Paragraph 545.356, and recommends that the following prima facie speed limits hereafter indicated for vehicles are hereby determined and declared to be reasonable and safe; and

WHEREAS, the City Council has also determined that there is a need for a school zone along portions of Jerry Dunn Parkway and Whitestone Ranch Road as a result of the newly-constructed Westpark Elementary School; and

WHEREAS, the City Council of the City of Benbrook, Texas is charged with regulating the safe travel of vehicles on roadways within the city limits of Benbrook, and in particular regulating speed limits on such roadways to protect the health and safety of citizens and other persons using such roadways; and

WHEREAS, the City Council has previously adopted Chapter 10.24.060 which established the previous State-adopted speed limit for RM 2871 in Benbrook.

NOW, THEREFORE, BE IT ORDAINED, BY THE CITY COUNCIL OF THE CITY OF BENBROOK, TEXAS:

SECTION 1

That Chapter 10.24-Speed Limits of the Benbrook Municipal Code (1985) as amended, Section 10.24.060-Fifty-five Miles Per Hour, is hereby amended by repealing and deleting Paragraph 10.24.060.B.1.

SECTION 2

That Chapter 10.24-Speed Limits is further amended by amending Section 10.24.010-Twenty Miles Per Hour, by adding two new paragraphs 10.24.010.B.24 and 25 to read as follows:

> "10.24.010 – Twenty miles per hour
>
> B. The maximum speed limit is twenty miles per hour on the following streets and highways, or parts thereof:
> 24. Jerry Dunn Parkway, from R.M. 2871 to a point 150 feet west of the intersection of Whitestone Ranch Road.
> 25. Whitestone Ranch Road, from Jerry Dunn Parkway to Stonehill Drive."

That Chapter 10.24-Speed Limits is further amended by amending Section 10.24.040 – Forty Miles Per Hour, by adding a new paragraph 10.24.040.B.11 to read as follows:

> **"10.24.040 – Forty miles per hour.**
>
> B. The maximum speed limit is forty miles per hour on the following streets and highways or parts thereof:
> 11. On Ranch-to-Market 2871, from Locksley Drive (TxDOT MP 14.850) to Benbrook Boulevard (US 377 TxDOT MP 15.322)."

SECTION 3

That Chapter 10.24-Speed Limits is further amended by amending Section 10.24.050 – Forty-five Miles Per Hour, by adding a new paragraph 10.24.050.B.5 to read as follows:

> **"10.24.050 – Forty-five miles per hour.**
>
> B. The maximum speed limit is forty-five miles per hour on the following streets and highways or parts thereof:

5. On Ranch-to-Market 2871, from City Limits (TxDOT MP 14.325) to Locksley Drive (TxDOT MP 14.850)"

SECTION 4
PENALTY CLAUSE

Any person, firm or corporation, who violates, disobeys, omits, neglects or refuses to comply with or who resists the enforcement of any of the provisions of this Ordinance shall be fined not more than Five Hundred Dollars ($500.00).

SECTION 5
CUMULATIVE CLAUSE

This ordinance shall be cumulative of all provisions of ordinances and of the Code of the City of Benbrook, Texas (1985), as amended, except where the provisions of this ordinance are in direct conflict with the provisions of such ordinances and such Code, in which event the conflicting provisions of such ordinances and such Code are hereby repealed.

SECTION 6
SEVERABILITY CLAUSE

It is hereby declared to be the intention of the City Council that the phrases, clauses, sentences, paragraphs, and sections of this ordinance are severable, and if any phrase, clause, sentence, paragraph or section of this ordinance shall be declared unconstitutional by the valid judgment or decree of any court of competent jurisdiction, such unconstitutionality shall not affect any of the remaining phrases, clauses, sentences, paragraphs, and sections of this ordinance, since the same would have been enacted by the City Council without the incorporation in this ordinance of any such unconstitutional phrase, clause, sentence, paragraph or section.

SECTION 7
SAVINGS CLAUSE

All rights and remedies of the City of Benbrook are expressly saved as to any and all violations of the provisions of the Benbrook Municipal Code (1985), as amended, or any ordinances regulating platting or subdivisions which have accrued at the time of the effective date of this ordinance; and, as to such accrued violations and all pending litigation, both civil and criminal, whether pending in court or not, under such ordinances, same shall not be affected by this ordinance but may be prosecuted until final disposition by the courts.

SECTION 8
PUBLICATION IN PAMPHLET FORM

The City Secretary of the City of Benbrook is hereby authorized to publish this ordinance in book or pamphlet form for general distribution among the public, and the operative provisions of this ordinance as so published shall be admissible in evidence in all courts without further proof than the productive thereof, as provided in Section 3.10 of the Charter of the City of Benbrook.

SECTION 9
ENGROSSMENT AND ENROLLMENT

The City Secretary of the City of Benbrook is hereby directed to engross and enroll the Ordinance by copying the caption, penalty clause, and effective date clause of this ordinance in the minutes of the City Council and by filing the Ordinance in the Ordinance records of the City.

SECTION 10
PUBLICATION IN OFFICIAL NEWSPAPER

The City Secretary of the City of Benbrook is hereby directed to publish the caption, penalty clause, publication clause and effective date clause of this ordinance for two (2) days in the official newspaper of the City of Benbrook, as authorized by Section 52.013 of the Local Government Code.

SECTION 11
EFFECTIVE DATE

This ordinance shall be in full force and effect from and after its passage and publication as required by law.

PASSED AND APPROVED the 4th day of August, 2016.

_____
Jerry B. Dittrich, Mayor

ATTEST:

_____
Joanna King, City Secretary